Solid lobe knobs

with elastic fork, technopolymer

INOX STAINLESS STEEL | RoHS | PA | POM | +60° 0°

MATERIAL

Glass-fibre reinforced polyamide based (PA) technopolymer, black colour, matte finish.
Elastic fork in acetal based technopolymer (POM), black colour.

STANDARD EXECUTIONS

- **VTT-B-RC**: brass boss, threaded blind hole.
- **VTT-SST-RC**: AISI 304 stainless steel boss, threaded blind hole.
- **VTT-p-RC**: zinc-plated steel threaded stud, chamfered flat end according to UNI 947 : ISO 4753 (see Technical Data).
- **VTT-SST-p-RC**: AISI 304 stainless steel threaded stud, chamfered flat end according to UNI 947 : ISO 4753 (see Technical Data).

FEATURES AND APPLICATIONS

Suitable where it is necessary to prevent the loss of the knob.
The elastic fork, housed in the groove of the knob can turn freely.
The three-lobe shape with large recesses is particularly ergonomic also for smaller knobs, ensuring an effective grip even with work gloves.
The design without rear cavities, generally adopted for reducing thickness, prevents unhealthy residues from depositing, ensuring easy cleaning. Particularly suitable for applications on machines and equipment whose parts must be frequently cleaned by using water jets or steam.

ACCESSORIES ON REQUEST

- CT-S technopolymer and stainless steel ball chains.
- GN 111 stainless steel and brass ball chains.
- CV-T polyethylene and stainless steel retaining cables.
- GN 111.2 stainless steel retaining cables.
- GN 111.4 polyurethane and stainless steel spiral retaining cables.
- GN 111.8 AISI 316 stainless steel retaining cables.





ELESA Original design

VTT-B-RC
VTT-SST-RC

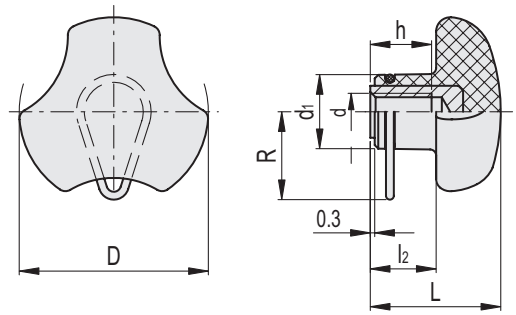

VTT-B-RC

Code	Description	D	d_{6H}	L	d_1	h	l_2	R	⚖
196601	VTT.25-B-M5-RC	25	M5	20	12	10	10	20	14
196631	VTT.32-B-M6-RC	32	M6	23	14	10	11.5	21	19
196661	VTT.40-B-M8-RC	40	M8	27	16	13	13.5	21.5	30
196691	VTT.50-B-M10-RC	50	M10	30	19	17	15	22.5	45
196722	VTT.60-B-M12-RC	60	M12	34	22.5	20	18	24	73

VTT-SST-RC INOX STAINLESS STEEL

Code	Description	D	d_{6H}	L	d_1	h	l_2	R	⚖
196606	VTT.25-SST-M5-RC	25	M5	20	12	10	10	20	15
196636	VTT.32-SST-M6-RC	32	M6	23	14	10	11.5	21	20
196666	VTT.40-SST-M8-RC	40	M8	27	16	13	13.5	21.5	30
196696	VTT.50-SST-M10-RC	50	M10	30	19	17	15	22.5	43
196727	VTT.60-SST-M12-RC	60	M12	34	22.5	20	18	24	73

Models all rights reserved in accordance with the law. Always mention the source when reproducing our drawings and photos.

VTT-p-RC
VTT-SST-p-RC

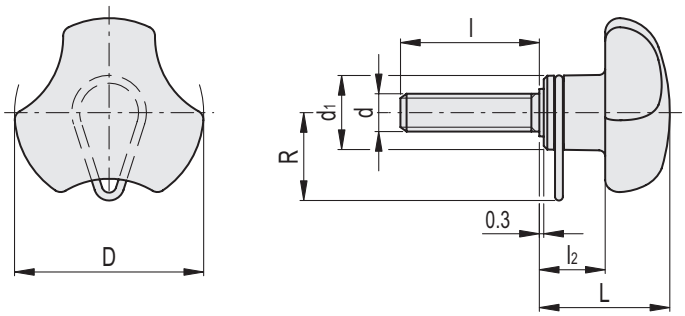

VTT-p-RC

Code	Description	D	d_{6g}	L	d_1	l	l_2	R	⚖
196611	VTT.25-p-M5x10-RC	25	M5	20	12	10	10	20	16
196612	VTT.25-p-M5x16-RC	25	M5	20	12	16	10	20	16
196613	VTT.25-p-M5x20-RC	25	M5	20	12	20	10	20	16
196614	VTT.25-p-M5x25-RC	25	M5	20	12	25	10	20	15
196641	VTT.32-p-M6x16-RC	32	M6	23	14	16	11.5	21	23
196642	VTT.32-p-M6x20-RC	32	M6	23	14	20	11.5	21	23
196643	VTT.32-p-M6x25-RC	32	M6	23	14	25	11.5	21	23
196644	VTT.32-p-M6x30-RC	32	M6	23	14	30	11.5	21	23
196671	VTT.40-p-M8x20-RC	40	M8	27	16	20	13.5	21.5	36
196672	VTT.40-p-M8x25-RC	40	M8	27	16	25	13.5	21.5	33
196673	VTT.40-p-M8x30-RC	40	M8	27	16	30	13.5	21.5	33
196674	VTT.40-p-M8x40-RC	40	M8	27	16	40	13.5	21.5	33
196701	VTT.50-p-M10x20-RC	50	M10	30	19	20	15	22.5	64
196702	VTT.50-p-M10x25-RC	50	M10	30	19	25	15	22.5	64
196703	VTT.50-p-M10x30-RC	50	M10	30	19	30	15	22.5	64
196704	VTT.50-p-M10x40-RC	50	M10	30	19	40	15	22.5	64
196705	VTT.50-p-M10x45-RC	50	M10	30	19	45	15	22.5	74
196731	VTT.60-p-M12x30-RC	60	M12	34	22.5	30	18	24	96
196733	VTT.60-p-M12x40-RC	60	M12	34	22.5	40	18	24	104
196735	VTT.60-p-M12x50-RC	60	M12	34	22.5	50	18	24	109

VTT-SST-p-RC

INOX STAINLESS STEEL

Code	Description	D	d_{6g}	L	d_1	l	l_2	R	⚖
196621	VTT.25-SST-p-M5x10-RC	25	M5	20	12	10	10	20	10
196622	VTT.25-SST-p-M5x16-RC	25	M5	20	12	16	10	20	12
196623	VTT.25-SST-p-M5x20-RC	25	M5	20	12	20	10	20	14
196624	VTT.25-SST-p-M5x25-RC	25	M5	20	12	25	10	20	17
196651	VTT.32-SST-p-M6x16-RC	32	M6	23	14	16	11.5	21	23
196652	VTT.32-SST-p-M6x20-RC	32	M6	23	14	20	11.5	21	23
196654	VTT.32-SST-p-M6x25-RC	32	M6	23	14	25	11.5	21	23
196655	VTT.32-SST-p-M6x30-RC	32	M6	23	14	30	11.5	21	22
196681	VTT.40-SST-p-M8x20-RC	40	M8	27	16	20	13.5	21.5	38
196682	VTT.40-SST-p-M8x25-RC	40	M8	27	16	25	13.5	21.5	32
196683	VTT.40-SST-p-M8x30-RC	40	M8	27	16	30	13.5	21.5	38
196684	VTT.40-SST-p-M8x40-RC	40	M8	27	16	40	13.5	21.5	35
196711	VTT.50-SST-p-M10x20-RC	50	M10	30	19	20	15	22.5	63
196712	VTT.50-SST-p-M10x25-RC	50	M10	30	19	25	15	22.5	68
196713	VTT.50-SST-p-M10x30-RC	50	M10	30	19	30	15	22.5	63
196714	VTT.50-SST-p-M10x40-RC	50	M10	30	19	40	15	22.5	63
196715	VTT.50-SST-p-M10x45-RC	50	M10	30	19	45	15	22.5	74
196741	VTT.60-SST-p-M12x30-RC	60	M12	34	22.5	30	18	24	96
196743	VTT.60-SST-p-M12x40-RC	60	M12	34	22.5	40	18	24	116
196745	VTT.60-SST-p-M12x50-RC	60	M12	34	22.5	50	18	24	122

Models all rights reserved in accordance with the law. Always mention the source when reproducing our drawings and photos.