MATERIAL
High-resilience polypropylene based (PP) technopolymer, black colour, matte finish. Produced from FDA compliant raw material (FDA CFR.21 and EU 10/2011).

BOSS-CAP
AISI 304 stainless steel self-adhesive front plate adhesive suitable for contact with food (FDA CFR.21 and EU 10/2011).

STANDARD EXECUTIONS
AISI 304 stainless steel boss, H7 reamed hole.
H9 reamed hole for executions with keyway.
- **VRTP-P+I-SST**: with revolving handle type I.621+x-SST in polyamide based (PA) technopolymer, certified in compliance with FDA.
- **VRTP-P+IR-SST**: with fold-away handle type IR.620 (see page 414) in polyamide based (PA) technopolymer, certified in compliance with FDA. AISI 304 stainless steel pin, bushing and internal components, AISI 316L stainless steel support.
- **K**: index for executions with hole and keyway in compliance with DIN 6885/1 (see page A-16), tolerance P9 i.e.:

79111-R-K VRTP.80-P+I-SST-8-K

ACCESSORIES ON REQUEST
Axial retaining washer GN 184.5 (see page 677).

FEATURES AND APPLICATIONS
The solid rim of the handwheel allows the easy cleaning thanks to the absence of rear recesses. For this reason, being the technopolymer polypropylene based and the metal components in AISI 304 stainless steel, this version of VRTP. handwheel is designed for applications in food, pharmaceutical and medical fields.

SPECIAL EXECUTIONS ON REQUEST
Handwheels with cross holes according to EN 110 (see page A-16).



ELESA Original design design96/97 stuttgart INDUSTRIE FORUM DESIGN HANNOVER 1995

VRTP-P+I-SST

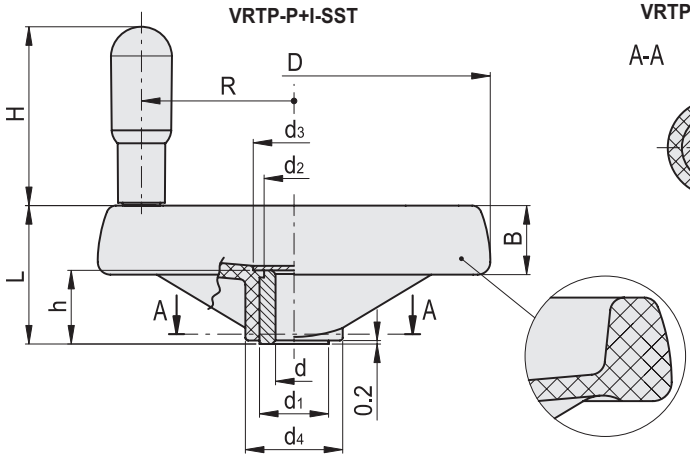

VRTP-P+I-SST-K

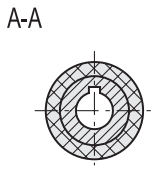

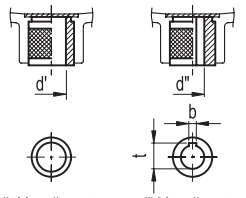

Solid rim without recesses maximum cleaning

VRTP-P+I-SST

INOX STAINLESS STEEL METRIC

Code	Description	D	dH7	L	B	d1	d2	d3	d4	h	H	R	d'	d''	t	b	C# [Nm]	L# [J]	⚖
79111-R	VRTP.80-P+I-SST-8	80	8	35	18	18	16	20.5	25	17	45	29	14	10	9	2	32	5	104
79161-R	VRTP.100-P+I-SST-10	99	10	37	20	18	16	20.5	25.5	17	60	37	14	10	11.4	3	54	7	145
79211-R	VRTP.125-P+I-SST-12	125	12	44	22	22	20	26	31	22	65	48	18	12	13.8	4	94	10	245
79261-R	VRTP.160-P+I-SST-14	160	14	51	25	26	24	32	40	27	73	65	20	16	16.3	5	185	15	356
79311-R	VRTP.200-P+I-SST-16	200	16	61	28	30	28	36	50	34	80	84	24	18	18.3	5	300	24	552
79313-R	VRTP.200-P+I-SST-20	200	20	61	28	30	28	36	50	34	80	84	24	22	22.8	6	300	24	548

* To order the execution with hole and keyway add the index -K after the code and description (i.e. 79111-R-K VRTP.80-P+I-SST-8-K).
# For maximum applicable torque (C) and impact strength (L) see Technical data on page A-3.

Models all rights reserved in accordance with the law. Always mention the source when reproducing our drawings and photos.

Conversion Table
1 mm = 0.039 inch

D	
mm	inch
80	3.15
99	3.90
125	4.92
160	6.30
200	7.80

VRTP-P+IR-SST

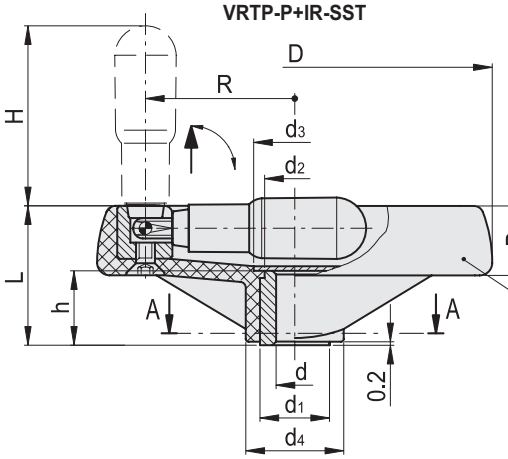

VRTP-P+IR-SST-K

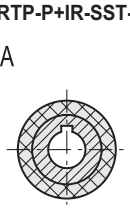

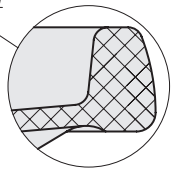

Solid rim
without recesses
maximum cleaning

INOX STAINLESS STEEL METRIC

VRTP-P+IR-SST

Code	Description	D	dH7	L	B	d1	d2	d3	d4	h	H	R	d'	d''	t	b	C# [Nm]	L# [J]	⚖
79121-R	VRTP.80-P+IR-SST-8	80	8	35	18	18	16	20.5	25	17	45	29	14	10	9	2	32	5	102
79171-R	VRTP.100-P+IR-SST-10	99	10	37	20	18	16	20.5	25.5	17	60	37	14	10	11.4	3	54	7	163
79221-R	VRTP.125-P+IR-SST-12	125	12	44	22	22	20	26	31	22	65	48	18	12	13.8	4	94	10	230
79271-R	VRTP.160-P+IR-SST-14	160	14	51	25	26	24	31	40	27	73	65	20	16	16.3	5	185	15	388
79321-R	VRTP.200-P+IR-SST-16	200	16	61	28	30	28	36	50	34	80	84	24	18	18.3	5	300	24	593
79323-R	VRTP.200-P+IR-SST-20	200	20	61	28	30	28	36	50	34	80	84	24	18	18.3	5	300	24	588

* To order the execution with hole and keyway add the index -K after the code and description (i.e. 79111-R-K VRTP.80-P+I-SST-8-K).
# For maximum applicable torque (C) and impact strength (L) see Technical data on page A-3.

Models all rights reserved in accordance with the law. Always mention the source when reproducing our drawings and photos.