Roller elements for ELEROLL roller tracks

For packages with reduced size, technopolymer

RoHS | POM | PA | +90° -20° | TPU | +70° -20°

STANDARD EXECUTIONS

Acetal resin based (POM) technopolymer roller holder, black colour.

- **RLT-U15-PA**: polyamide based (PA) technopolymer rollers, black colour. Working temperature +90°/-20°C.
- **RLT-U15-TPU**: thermoplastic (TPU) polyurethane rollers, hardness 92 Shore A, grey colour. Working temperature +70°/-20°C.

FEATURES AND APPLICATIONS

- The roller elements, suitably fixed inside the RLT-AL aluminum profiles (Fig. 1) create modular roller tracks for idle handling (both as sliding or containing surfaces), suitable for several applications in different fields: feeding and discharging benches in construction machinery, storage and picking systems, packaging machinery, etc..
- RLT-U15 roller elements are suitable for handling of packages with reduced weight and size. The smaller diameter of the rollers ensures a reduction in vibrations and consequently a lower noise during handling of packages.
- RLT-U15-TPU roller elements, with rollers in anti-scratch material, allow the handling of delicate materials such as glass and wood.
- The low friction coefficient between the roller and the roller holder eliminates the need for lubrication maintenance.
- The particular section of RLT-AL profile allows the snap-in assembly of the roller elements into the profile without the need for screws or other fasteners (Fig.1). Therefore the roller elements may be quickly and easily removed and replaced, without disassembling the entire roller track.
- The roller elements are divisible in correspondence of predefined sections (Fig.2) so as to create roller tracks of the precise required length.
- All the accessories of ELEROLL series can also be used with the RLT-U15 roller elements, except for RLT-B brakes.

TECHNICAL DATA

See: ELEROLL Modular roller tracks (on page 977).



FMdesign ele:roll

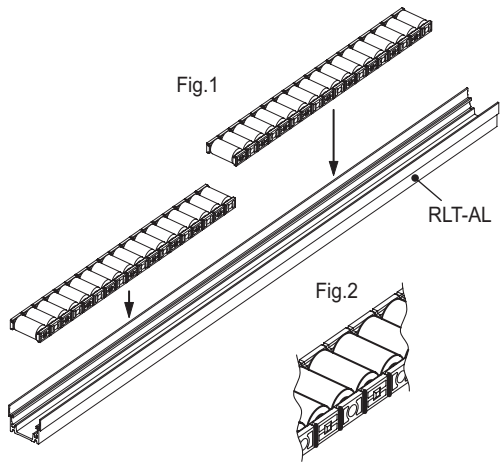

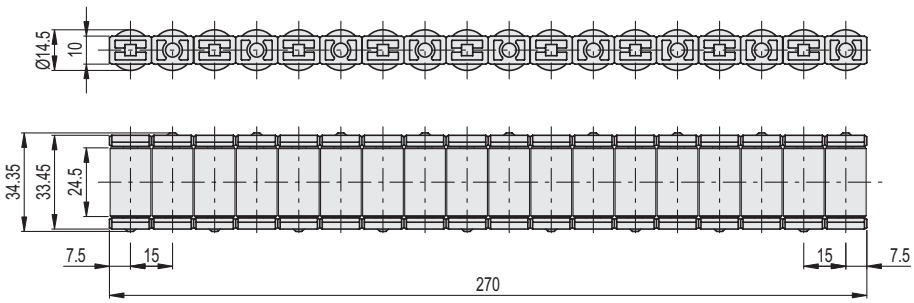

METRIC

Code	Description	⚖
429807	RLT-U15-PA	102
429808	RLT-U15-TPU	109

Models all rights reserved in accordance with the law. Always mention the source when reproducing our drawings and photos.