RoHS POM PA +194 °F -4 °F TPU +158 °F -4 °F

STANDARD EXECUTIONS

Acetal resin based (POM) technopolymer roller holder, black colour.
- **RLT-U-PA**: polyamide based (PA) technopolymer rollers, black colour. Working temperature +90°/-20°C.
- **RLT-U-TPU**: thermoplastic (TPU) polyurethane rollers, hardness 92 Shore A, grey colour. Working temperature +70°/-20°C.

FEATURES AND APPLICATIONS

- The roller elements, suitably fixed inside the RLT-AL aluminum profiles (Fig. 1) create modular roller tracks for idle handling (both as sliding or containing surfaces), suitable for several applications in different fields: feeding and discharging benches in construction machinery, storage and picking systems, packaging machinery, etc..
- RLT-U-PA roller elements are also suitable for handling heavy packages, RLT-U-TPU roller elements, with rollers in anti-scratch material, allow the handling of delicate materials such as glass and wood.
- The low friction coefficient between the roller and the roller holder eliminates the need for lubrication maintenance.
- The particular section of RLT-AL profile allows the snap-in assembly of the roller elements into the profile without the need for screws or other fasteners (Fig.1). Therefore the roller elements may be quickly and easily removed and replaced, without disassembling the entire roller track.
- The roller elements are divisible in correspondence of predefined sections (Fig.2) so as to create roller tracks of the precise required length.

TECHNICAL DATA

See: ELEROLL Modular roller tracks (on page 1101).

SPECIAL EXECUTIONS ON REQUEST

Rollers in different colour (for example red, yellow, green for the setting up of assembly lines and dynamic warehouses according to Kanban criteria).



ele:roll®

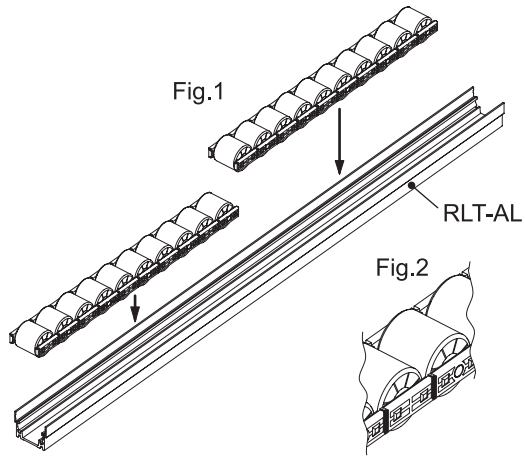

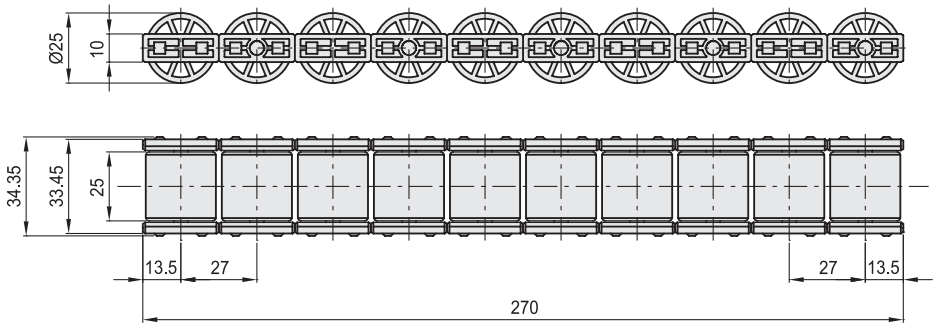

RLT-U-PA METRIC

Code	Description	⚖
429806	RLT-U-PA	106

RLT-U-TPU METRIC

Code	Description	⚖
429811	RLT-U-TPU	114

Models all rights reserved in accordance with the law. Always mention the source when reproducing our drawings and photos.