Ball elements for ELEROLL roller tracks

Technopolymer

RoHS | POM | PA | +140 °F / -4 °F

BALLS
Acetal resin based (POM) technopolymer, white colour.

BALL HOLDER
Polyamide based (PA) technopolymer, black colour.

FEATURES AND APPLICATIONS
- The ball elements, suitably fixed within the RLT-AL aluminum profiles (Fig. 1) create modular roller tracks for idle omnidirectional handling.
- The ball elements can be combined with RLT-U roller elements for various applications in different fields: feeding and discharging benches in construction machinery, storage and picking systems, packaging machinery, etc.
- The low friction coefficient between the ball and the ball holder eliminates the need for lubrication maintenance.
- The particular section of RLT-AL profile allows the fixing of the ball elements into the profile without the need for screws or other fasteners (Fig.1).
- The ball elements are divisible in correspondence of predefined sections (Fig.2) so as to create roller tracks of the precise required length.
- The balls may be removed and replaced without disassembling the entire roller track, by using a common screwdriver in the appropriate notch cut into the ball holder (Fig. 3).

TECHNICAL DATA
See: ELEROLL Modular roller tracks (on page 1101).



ele:roll®

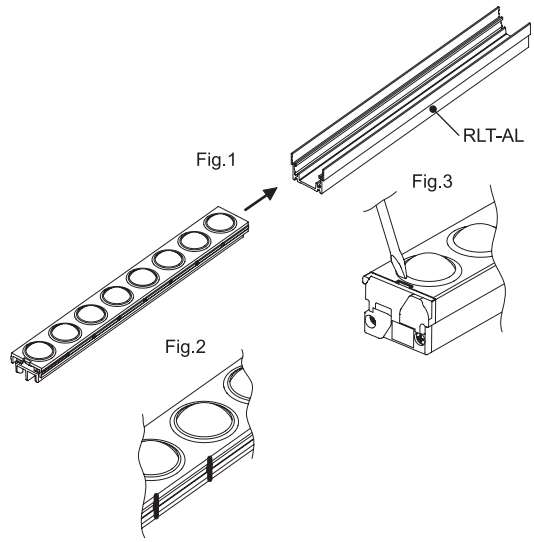

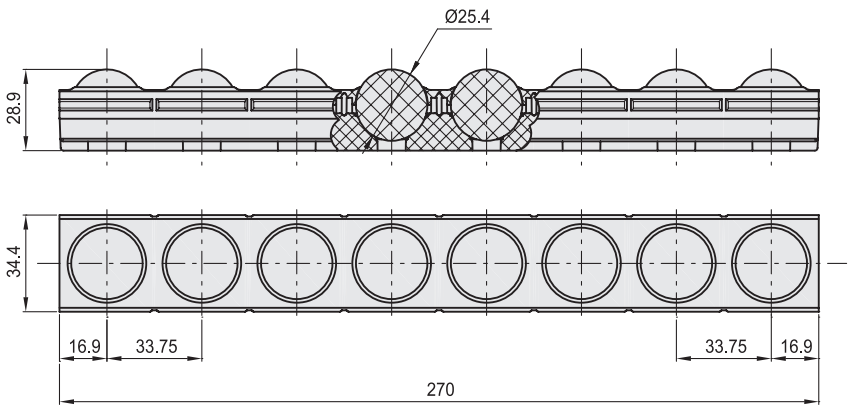

METRIC

Code	Description	⚖
429801	RLS-U-POM	151

elesa®

Models all rights reserved in accordance with the law. Always mention the source when reproducing our drawings and photos.