MATERIAL
AISI 316L stainless steel.

PACKING RING
- H: H-NBR synthetic rubber, hardness 85 +/-5 Shore A, in blue, FDA compliant, resistant from -25°C to +150°C.
- E: EPDM synthetic rubber, hardness 85 +/-5 Shore A, in blue, FDA compliant, resistant from -40°C to +120°C.
- F: FKM synthetic rubber, hardness 85 +/-5 Shore A, in blue, FDA compliant, resistant from -5 °C to +200 °C.

STANDARD EXECUTIONS
- **NTR-HD-SST-MT-H**: sandblasted matte finish (RA < 0.8µ), H-NBR packing ring.
- **NTR-HD-SST-MT-E**: sandblasted matte finish (RA < 0.8µ), EPDM packing ring.
- **NTR-HD-SST-MT-F**: sandblasted matte finish (RA < 0,8µ), FKM packing ring.
- **NTR-HD-SST-PL-H**: mirror polished finish (RA < 0.8µ), H-NBR packing ring.
- **NTR-HD-SST-PL-E**: mirror polished finish (RA < 0.8µ), EPDM packing ring.
- **NTR-HD-SST-PL-F**: mirror polished finish (RA <0,8µ), FKM packing ring.

FEATURES AND APPLICATIONS
The NTR-HD-SST screws are accessories for securing the levelling feet, certified in accordance with EHEDG guidelines, that are designed for use in environments where a high level of hygiene is required.
The presence of the special packing ring seals the thread from the external environment, preventing the access of impurities.
The finish quality, angular seal and absence of recesses, prevents dirt adherence and facilitates cleaning.
See technical data Hygienic Design.

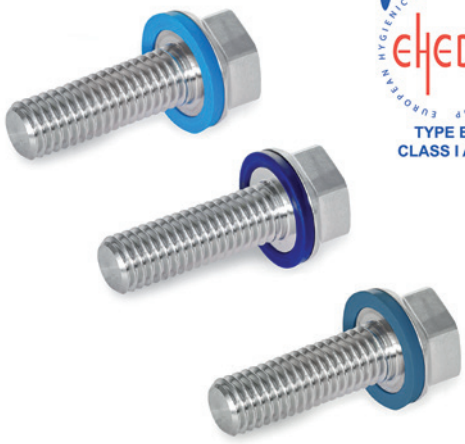

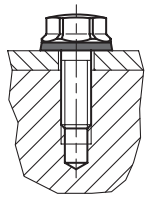

Models all rights reserved in accordance with the law. Always mention the source when reproducing our drawings and photos.

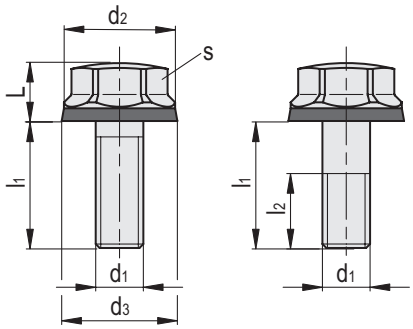

NTR-HD-SST-MT-H

INOX STAINLESS STEEL

Code	Description	L	l_1	l_2	d_1	d_2	d_3	s	⚖
321442	NTR-HD-SST-p-M4x8-MT-H	6.5	8	-	M4	10	10.8	7	6
321447	NTR-HD-SST-p-M4x10-MT-H	6.5	10	-	M4	10	10.8	7	6
321452	NTR-HD-SST-p-M4x12-MT-H	6.5	12	-	M4	10	10.8	7	6
321457	NTR-HD-SST-p-M4x16-MT-H	6.5	16	14	M4	10	10.8	7	7
321462	NTR-HD-SST-p-M4x20-MT-H	6.5	20	14	M4	10	10.8	7	7
321467	NTR-HD-SST-p-M4x25-MT-H	6.5	25	14	M4	10	10.8	7	8
321472	NTR-HD-SST-p-M4x30-MT-H	6.5	30	14	M4	10	10.8	7	8
321477	NTR-HD-SST-p-M5x10-MT-H	7	10	-	M5	11	11.8	8	6
320863	NTR-HD-SST-p-M5x12-MT-H	7	12	-	M5	11	11.8	8	5
321501	NTR-HD-SST-p-M5x16-MT-H	7	16	-	M5	11	11.8	8	6
321511	NTR-HD-SST-p-M5x20-MT-H	7	20	16	M5	11	11.8	8	6
321482	NTR-HD-SST-p-M5x25-MT-H	7	25	16	M5	11	11.8	8	7
321487	NTR-HD-SST-p-M5x30-MT-H	7	30	16	M5	11	11.8	8	13
321492	NTR-HD-SST-p-M5x35-MT-H	7	35	16	M5	11	11.8	8	8
321497	NTR-HD-SST-p-M5x40-MT-H	7	40	16	M5	11	11.8	8	9
321521	NTR-HD-SST-p-M6x12-MT-H	7.5	12	-	M6	13	13.8	10	8
321531	NTR-HD-SST-p-M6x16-MT-H	7.5	16	-	M6	13	13.8	10	9
321541	NTR-HD-SST-p-M6x20-MT-H	7.5	20	-	M6	13	13.8	10	10
321551	NTR-HD-SST-p-M6x25-MT-H	7.5	25	-	M6	13	13.8	10	11
321561	NTR-HD-SST-p-M6x30-MT-H	7.5	30	18	M6	13	13.8	10	12
321772	NTR-HD-SST-p-M6x35-MT-H	7.5	35	18	M6	13	13.8	10	12
321777	NTR-HD-SST-p-M6x40-MT-H	7.5	40	18	M6	13	13.8	10	14
321782	NTR-HD-SST-p-M6x50-MT-H	7.5	50	18	M6	13	13.8	10	16
321571	NTR-HD-SST-p-M8x16-MT-H	8.5	16	-	M8	16	16.8	13	16
321581	NTR-HD-SST-p-M8x20-MT-H	8.5	20	-	M8	16	16.8	13	17
321591	NTR-HD-SST-p-M8x25-MT-H	8.5	25	-	M8	16	16.8	13	19
321601	NTR-HD-SST-p-M8x30-MT-H	8.5	30	-	M8	16	16.8	13	21
321611	NTR-HD-SST-p-M8x40-MT-H	8.5	40	22	M8	16	16.8	13	25
321787	NTR-HD-SST-p-M8x50-MT-H	8.5	50	22	M8	16	16.8	13	29
321792	NTR-HD-SST-p-M8x60-MT-H	8.5	60	22	M8	16	16.8	13	33
321621	NTR-HD-SST-p-M10x20-MT-H	9.5	20	-	M10	19	19.8	16	28
321631	NTR-HD-SST-p-M10x25-MT-H	9.5	25	-	M10	19	19.8	16	31
321641	NTR-HD-SST-p-M10x30-MT-H	9.5	30	-	M10	19	19.8	16	34
321651	NTR-HD-SST-p-M10x40-MT-H	9.5	40	26	M10	19	19.8	16	40
321661	NTR-HD-SST-p-M10x50-MT-H	9.5	50	26	M10	19	19.8	16	46
321977	NTR-HD-SST-p-M10x60-MT-H	9.5	60	26	M10	19	19.8	16	52
321671	NTR-HD-SST-p-M12x25-MT-H	11	25	-	M12	22	22.8	18	46
321681	NTR-HD-SST-p-M12x30-MT-H	11	30	-	M12	22	22.8	18	50
321691	NTR-HD-SST-p-M12x40-MT-H	11	40	30	M12	22	22.8	18	59
321701	NTR-HD-SST-p-M12x50-MT-H	11	50	30	M12	22	22.8	18	68
321711	NTR-HD-SST-p-M12x60-MT-H	11	60	30	M12	22	22.8	18	76
321721	NTR-HD-SST-p-M16x30-MT-H	13	30	-	M16	28	28.8	22	90
321731	NTR-HD-SST-p-M16x40-MT-H	13	40	-	M16	28	28.8	22	106
321741	NTR-HD-SST-p-M16x50-MT-H	13	50	38	M16	28	28.8	22	122
321751	NTR-HD-SST-p-M16x60-MT-H	13	60	38	M16	28	28.8	22	137
321761	NTR-HD-SST-p-M16x70-MT-H	13	70	38	M16	28	28.8	22	153
321982	NTR-HD-SST-p-M20x40-MT-H	15	40	-	M20	34	34.8	27	172
321987	NTR-HD-SST-p-M20x60-MT-H	15	60	46	M20	34	34.8	27	221

NTR-HD-SST-MT-E

INOX STAINLESS STEEL

Code	Description	L	l_1	l_2	d_1	d_2	d_3	s	⚖
321441	NTR-HD-SST-p-M4x8-MT-E	6.5	8	-	M4	10	10.8	7	6
321446	NTR-HD-SST-p-M4x10-MT-E	6.5	10	-	M4	10	10.8	7	6
321451	NTR-HD-SST-p-M4x12-MT-E	6.5	12	-	M4	10	10.8	7	6
321456	NTR-HD-SST-p-M4x16-MT-E	6.5	16	14	M4	10	10.8	7	7
321461	NTR-HD-SST-p-M4x20-MT-E	6.5	20	14	M4	10	10.8	7	7
321466	NTR-HD-SST-p-M4x25-MT-E	6.5	25	14	M4	10	10.8	7	8
321471	NTR-HD-SST-p-M4x30-MT-E	6.5	30	14	M4	10	10.8	7	8
321476	NTR-HD-SST-p-M5x10-MT-E	7	10	-	M5	11	11.8	8	6
320861	NTR-HD-SST-p-M5x12-MT-E	7	12	-	M5	11	11.8	8	5
321502	NTR-HD-SST-p-M5x16-MT-E	7	16	-	M5	11	11.8	8	6
321512	NTR-HD-SST-p-M5x20-MT-E	7	20	16	M5	11	11.8	8	6
321481	NTR-HD-SST-p-M5x25-MT-E	7	25	16	M5	11	11.8	8	7
321486	NTR-HD-SST-p-M5x30-MT-E	7	30	16	M5	11	11.8	8	13
321491	NTR-HD-SST-p-M5x35-MT-E	7	35	16	M5	11	11.8	8	8
321496	NTR-HD-SST-p-M5x40-MT-E	7	40	16	M5	11	11.8	8	9
321522	NTR-HD-SST-p-M6x12-MT-E	7.5	12	-	M6	13	13.8	10	8
321532	NTR-HD-SST-p-M6x16-MT-E	7.5	16	-	M6	13	13.8	10	9
321542	NTR-HD-SST-p-M6x20-MT-E	7.5	20	-	M6	13	13.8	10	10
321552	NTR-HD-SST-p-M6x25-MT-E	7.5	25	-	M6	13	13.8	10	11
321562	NTR-HD-SST-p-M6x30-MT-E	7.5	30	18	M6	13	13.8	10	12
321771	NTR-HD-SST-p-M6x35-MT-E	7.5	35	18	M6	13	13.8	10	12
321776	NTR-HD-SST-p-M6x40-MT-E	7.5	40	18	M6	13	13.8	10	14
321781	NTR-HD-SST-p-M6x50-MT-E	7.5	50	18	M6	13	13.8	10	16
321572	NTR-HD-SST-p-M8x16-MT-E	8.5	16	-	M8	16	16.8	13	16
321582	NTR-HD-SST-p-M8x20-MT-E	8.5	20	-	M8	16	16.8	13	17
321592	NTR-HD-SST-p-M8x25-MT-E	8.5	25	-	M8	16	16.8	13	19
321602	NTR-HD-SST-p-M8x30-MT-E	8.5	30	-	M8	16	16.8	13	21
321612	NTR-HD-SST-p-M8x40-MT-E	8.5	40	22	M8	16	16.8	13	25
321786	NTR-HD-SST-p-M8x50-MT-E	8.5	50	22	M8	16	16.8	13	29
321791	NTR-HD-SST-p-M8x60-MT-E	8.5	60	22	M8	16	16.8	13	33
321622	NTR-HD-SST-p-M10x20-MT-E	9.5	20	-	M10	19	19.8	16	28
321632	NTR-HD-SST-p-M10x25-MT-E	9.5	25	-	M10	19	19.8	16	31
321642	NTR-HD-SST-p-M10x30-MT-E	9.5	30	-	M10	19	19.8	16	34
321652	NTR-HD-SST-p-M10x40-MT-E	9.5	40	26	M10	19	19.8	16	40
321662	NTR-HD-SST-p-M10x50-MT-E	9.5	50	26	M10	19	19.8	16	46
321976	NTR-HD-SST-p-M10x60-MT-E	9.5	60	26	M10	19	19.8	16	52
321672	NTR-HD-SST-p-M12x25-MT-E	11	25	-	M12	22	22.8	18	46
321682	NTR-HD-SST-p-M12x30-MT-E	11	30	-	M12	22	22.8	18	50
321692	NTR-HD-SST-p-M12x40-MT-E	11	40	30	M12	22	22.8	18	59
321702	NTR-HD-SST-p-M12x50-MT-E	11	50	30	M12	22	22.8	18	68
321712	NTR-HD-SST-p-M12x60-MT-E	11	60	30	M12	22	22.8	18	76
321722	NTR-HD-SST-p-M16x30-MT-E	13	30	-	M16	28	28.8	22	90
321732	NTR-HD-SST-p-M16x40-MT-E	13	40	-	M16	28	28.8	22	106
321742	NTR-HD-SST-p-M16x50-MT-E	13	50	38	M16	28	28.8	22	122
321752	NTR-HD-SST-p-M16x60-MT-E	13	60	38	M16	28	28.8	22	137
321762	NTR-HD-SST-p-M16x70-MT-E	13	70	38	M16	28	28.8	22	153
321981	NTR-HD-SST-p-M20x40-MT-E	15	40	-	M20	34	34.8	27	172
321986	NTR-HD-SST-p-M20x60-MT-E	15	60	46	M20	34	34.8	27	221

Models all rights reserved in accordance with the law. Always mention the source when reproducing our drawings and photos.

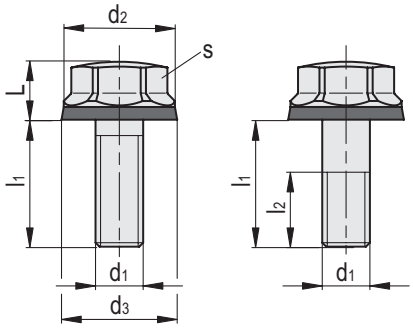

NTR-HD-SST-MT-F

INOX STAINLESS STEEL

Code	Description	L	l_1	l_2	d_1	d_2	d_3	s	⚖
321991	NTR-HD-SST-p-M4x8-MT-F	6.5	8	-	M4	10	10.8	7	7
321993	NTR-HD-SST-p-M4x10-MT-F	6.5	10	-	M4	10	10.8	7	8
321995	NTR-HD-SST-p-M4x12-MT-F	6.5	12	-	M4	10	10.8	7	9
321997	NTR-HD-SST-p-M4x16-MT-F	6.5	16	14	M4	10	10.8	7	10
321999	NTR-HD-SST-p-M4x20-MT-F	6.5	20	14	M4	10	10.8	7	11
322001	NTR-HD-SST-p-M4x25-MT-F	6.5	25	14	M4	10	10.8	7	12
322003	NTR-HD-SST-p-M4x30-MT-F	6.5	30	14	M4	10	10.8	7	13
322005	NTR-HD-SST-p-M5x10-MT-F	7	10	-	M5	11	11.8	8	6
320862	NTR-HD-SST-p-M5x12-MT-F	7	12	-	M5	11	11.8	8	5
322007	NTR-HD-SST-p-M5x16-MT-F	7	16	-	M5	11	11.8	8	10
322009	NTR-HD-SST-p-M5x20-MT-F	7	20	16	M5	11	11.8	8	7
322011	NTR-HD-SST-p-M5x25-MT-F	7	25	16	M5	11	11.8	8	11
322013	NTR-HD-SST-p-M5x30-MT-F	7	30	16	M5	11	11.8	8	14
322015	NTR-HD-SST-p-M5x35-MT-F	7	35	16	M5	11	11.8	8	15
322017	NTR-HD-SST-p-M5x40-MT-F	7	40	16	M5	11	11.8	8	16
322019	NTR-HD-SST-p-M6x12-MT-F	7.5	12	-	M6	13	13.8	10	8
322021	NTR-HD-SST-p-M6x16-MT-F	7.5	16	-	M6	13	13.8	10	9
322023	NTR-HD-SST-p-M6x20-MT-F	7.5	20	-	M6	13	13.8	10	10
322025	NTR-HD-SST-p-M6x25-MT-F	7.5	25	-	M6	13	13.8	10	11
322027	NTR-HD-SST-p-M6x30-MT-F	7.5	30	18	M6	13	13.8	10	12
322029	NTR-HD-SST-p-M6x35-MT-F	7.5	35	18	M6	13	13.8	10	13
322031	NTR-HD-SST-p-M6x40-MT-F	7.5	40	18	M6	13	13.8	10	14
322033	NTR-HD-SST-p-M6x50-MT-F	7.5	50	18	M6	13	13.8	10	16
322035	NTR-HD-SST-p-M8x16-MT-F	8.5	16	-	M8	16	16.8	13	17
322037	NTR-HD-SST-p-M8x20-MT-F	8.5	20	-	M8	16	16.8	13	18
322039	NTR-HD-SST-p-M8x25-MT-F	8.5	25	-	M8	16	16.8	13	19
322041	NTR-HD-SST-p-M8x30-MT-F	8.5	30	-	M8	16	16.8	13	21
322043	NTR-HD-SST-p-M8x40-MT-F	8.5	40	22	M8	16	16.8	13	25
322045	NTR-HD-SST-p-M8x50-MT-F	8.5	50	22	M8	16	16.8	13	29
322047	NTR-HD-SST-p-M8x60-MT-F	8.5	60	22	M8	16	16.8	13	33
322049	NTR-HD-SST-p-M10x20-MT-F	9.5	20	-	M10	19	19.8	16	28
322051	NTR-HD-SST-p-M10x25-MT-F	9.5	25	-	M10	19	19.8	16	31
322053	NTR-HD-SST-p-M10x30-MT-F	9.5	30	-	M10	19	19.8	16	34
322055	NTR-HD-SST-p-M10x40-MT-F	9.5	40	26	M10	19	19.8	16	40
322057	NTR-HD-SST-p-M10x50-MT-F	9.5	50	26	M10	19	19.8	16	46
322059	NTR-HD-SST-p-M10x60-MT-F	9.5	60	26	M10	19	19.8	16	52
322061	NTR-HD-SST-p-M12x25-MT-F	11	25	-	M12	22	22.8	18	46
322063	NTR-HD-SST-p-M12x30-MT-F	11	30	-	M12	22	22.8	18	50
322065	NTR-HD-SST-p-M12x40-MT-F	11	40	30	M12	22	22.8	18	59
322067	NTR-HD-SST-p-M12x50-MT-F	11	50	30	M12	22	22.8	18	68
322069	NTR-HD-SST-p-M12x60-MT-F	11	60	30	M12	22	22.8	18	76
322071	NTR-HD-SST-p-M16x30-MT-F	13	30	-	M16	28	28.8	22	90
322073	NTR-HD-SST-p-M16x40-MT-F	13	40	-	M16	28	28.8	22	106
322075	NTR-HD-SST-p-M16x50-MT-F	13	50	38	M16	28	28.8	22	122
322077	NTR-HD-SST-p-M16x60-MT-F	13	60	38	M16	28	28.8	22	137
322079	NTR-HD-SST-p-M16x70-MT-F	13	70	38	M16	28	28.8	22	153
322081	NTR-HD-SST-p-M20x40-MT-F	15	40	-	M20	34	34.8	27	172
322083	NTR-HD-SST-p-M20x60-MT-F	15	60	46	M20	34	34.8	27	221

NTR-HD-SST-PL-H

INOX STAINLESS STEEL

Code	Description	L	l_1	l_2	d_1	d_2	d_3	s	⚖
321444	NTR-HD-SST-p-M4x8-PL-H	6.5	8	-	M4	10	10.8	7	6
321449	NTR-HD-SST-p-M4x10-PL-H	6.5	10	-	M4	10	10.8	7	6
321454	NTR-HD-SST-p-M4x12-PL-H	6.5	12	-	M4	10	10.8	7	6
321459	NTR-HD-SST-p-M4x16-PL-H	6.5	16	14	M4	10	10.8	7	7
321464	NTR-HD-SST-p-M4x20-PL-H	6.5	20	14	M4	10	10.8	7	7
321469	NTR-HD-SST-p-M4x25-PL-H	6.5	25	14	M4	10	10.8	7	8
321474	NTR-HD-SST-p-M4x30-PL-H	6.5	30	14	M4	10	10.8	7	8
321479	NTR-HD-SST-p-M5x10-PL-H	7	10	-	M5	11	11.8	8	6
320866	NTR-HD-SST-p-M5x12-PL-H	7	12	-	M5	11	11.8	8	5
321506	NTR-HD-SST-p-M5x16-PL-H	7	16	-	M5	11	11.8	8	6
321516	NTR-HD-SST-p-M5x20-PL-H	7	20	16	M5	11	11.8	8	6
321484	NTR-HD-SST-p-M5x25-PL-H	7	25	16	M5	11	11.8	8	7
321489	NTR-HD-SST-p-M5x30-PL-H	7	30	16	M5	11	11.8	8	13
321494	NTR-HD-SST-p-M5x35-PL-H	7	35	16	M5	11	11.8	8	8
321499	NTR-HD-SST-p-M5x40-PL-H	7	40	16	M5	11	11.8	8	9
321526	NTR-HD-SST-p-M6x12-PL-H	7.5	12	-	M6	13	13.8	10	8
321536	NTR-HD-SST-p-M6x16-PL-H	7.5	16	-	M6	13	13.8	10	9
321546	NTR-HD-SST-p-M6x20-PL-H	7.5	20	-	M6	13	13.8	10	10
321556	NTR-HD-SST-p-M6x25-PL-H	7.5	25	-	M6	13	13.8	10	11
321566	NTR-HD-SST-p-M6x30-PL-H	7.5	30	18	M6	13	13.8	10	12
321774	NTR-HD-SST-p-M6x35-PL-H	7.5	35	18	M6	13	13.8	10	12
321779	NTR-HD-SST-p-M6x40-PL-H	7.5	40	18	M6	13	13.8	10	14
321784	NTR-HD-SST-p-M6x50-PL-H	7.5	50	18	M6	13	13.8	10	16
321576	NTR-HD-SST-p-M8x16-PL-H	8.5	16	-	M8	16	16.8	13	16
321586	NTR-HD-SST-p-M8x20-PL-H	8.5	20	-	M8	16	16.8	13	17
321596	NTR-HD-SST-p-M8x25-PL-H	8.5	25	-	M8	16	16.8	13	19
321606	NTR-HD-SST-p-M8x30-PL-H	8.5	30	-	M8	16	16.8	13	21
321616	NTR-HD-SST-p-M8x40-PL-H	8.5	40	22	M8	16	16.8	13	25
321789	NTR-HD-SST-p-M8x50-PL-H	8.5	50	22	M8	16	16.8	13	29
321794	NTR-HD-SST-p-M8x60-PL-H	8.5	60	22	M8	16	16.8	13	33
321626	NTR-HD-SST-p-M10x20-PL-H	9.5	20	-	M10	19	19.8	16	28
321636	NTR-HD-SST-p-M10x25-PL-H	9.5	25	-	M10	19	19.8	16	31
321646	NTR-HD-SST-p-M10x30-PL-H	9.5	30	-	M10	19	19.8	16	34
321656	NTR-HD-SST-p-M10x40-PL-H	9.5	40	26	M10	19	19.8	16	40
321666	NTR-HD-SST-p-M10x50-PL-H	9.5	50	26	M10	19	19.8	16	46
321979	NTR-HD-SST-p-M10x60-PL-H	9.5	60	26	M10	19	19.8	16	52
321676	NTR-HD-SST-p-M12x25-PL-H	11	25	-	M12	22	22.8	18	46
321686	NTR-HD-SST-p-M12x30-PL-H	11	30	-	M12	22	22.8	18	50
321696	NTR-HD-SST-p-M12x40-PL-H	11	40	30	M12	22	22.8	18	59
321706	NTR-HD-SST-p-M12x50-PL-H	11	50	30	M12	22	22.8	18	68
321716	NTR-HD-SST-p-M12x60-PL-H	11	60	30	M12	22	22.8	18	76
321726	NTR-HD-SST-p-M16x30-PL-H	13	30	-	M16	28	28.8	22	90
321736	NTR-HD-SST-p-M16x40-PL-H	13	40	-	M16	28	28.8	22	106
321746	NTR-HD-SST-p-M16x50-PL-H	13	50	38	M16	28	28.8	22	122
321756	NTR-HD-SST-p-M16x60-PL-H	13	60	38	M16	28	28.8	22	137
321766	NTR-HD-SST-p-M16x70-PL-H	13	70	38	M16	28	28.8	22	153
321984	NTR-HD-SST-p-M20x40-PL-H	15	40	-	M20	34	34.8	27	172
321989	NTR-HD-SST-p-M20x60-PL-H	15	60	46	M20	34	34.8	27	221

Models all rights reserved in accordance with the law. Always mention the source when reproducing our drawings and photos.

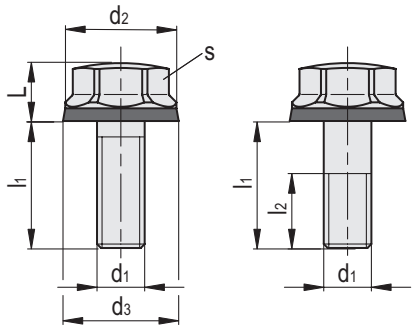

NTR-HD-SST-PL-E

INOX STAINLESS STEEL

Code	Description	L	l_1	l_2	d_1	d_2	d_3	s	⚖
321443	NTR-HD-SST-p-M4x8-PL-E	6.5	8	-	M4	10	10.8	7	6
321448	NTR-HD-SST-p-M4x10-PL-E	6.5	10	-	M4	10	10.8	7	6
321453	NTR-HD-SST-p-M4x12-PL-E	6.5	12	-	M4	10	10.8	7	6
321458	NTR-HD-SST-p-M4x16-PL-E	6.5	16	14	M4	10	10.8	7	7
321463	NTR-HD-SST-p-M4x20-PL-E	6.5	20	14	M4	10	10.8	7	7
321468	NTR-HD-SST-p-M4x25-PL-E	6.5	25	14	M4	10	10.8	7	8
321473	NTR-HD-SST-p-M4x30-PL-E	6.5	30	14	M4	10	10.8	7	8
321478	NTR-HD-SST-p-M5x10-PL-E	7	10	-	M5	11	11.8	8	6
320864	NTR-HD-SST-p-M5x12-PL-E	7	12	-	M5	11	11.8	8	5
321507	NTR-HD-SST-p-M5x16-PL-E	7	16	-	M5	11	11.8	8	6
321517	NTR-HD-SST-p-M5x20-PL-E	7	20	16	M5	11	11.8	8	6
321483	NTR-HD-SST-p-M5x25-PL-E	7	25	16	M5	11	11.8	8	7
321488	NTR-HD-SST-p-M5x30-PL-E	7	30	16	M5	11	11.8	8	13
321493	NTR-HD-SST-p-M5x35-PL-E	7	35	16	M5	11	11.8	8	8
321498	NTR-HD-SST-p-M5x40-PL-E	7	40	16	M5	11	11.8	8	9
321527	NTR-HD-SST-p-M6x12-PL-E	7.5	12	-	M6	13	13.8	10	8
321537	NTR-HD-SST-p-M6x16-PL-E	7.5	16	-	M6	13	13.8	10	9
321547	NTR-HD-SST-p-M6x20-PL-E	7.5	20	-	M6	13	13.8	10	10
321557	NTR-HD-SST-p-M6x25-PL-E	7.5	25	-	M6	13	13.8	10	11
321567	NTR-HD-SST-p-M6x30-PL-E	7.5	30	18	M6	13	13.8	10	12
321773	NTR-HD-SST-p-M6x35-PL-E	7.5	35	18	M6	13	13.8	10	12
321778	NTR-HD-SST-p-M6x40-PL-E	7.5	40	18	M6	13	13.8	10	14
321783	NTR-HD-SST-p-M6x50-PL-E	7.5	50	18	M6	13	13.8	10	16
321577	NTR-HD-SST-p-M8x16-PL-E	8.5	16	-	M8	16	16.8	13	16
321587	NTR-HD-SST-p-M8x20-PL-E	8.5	20	-	M8	16	16.8	13	17
321597	NTR-HD-SST-p-M8x25-PL-E	8.5	25	-	M8	16	16.8	13	19
321607	NTR-HD-SST-p-M8x30-PL-E	8.5	30	-	M8	16	16.8	13	21
321617	NTR-HD-SST-p-M8x40-PL-E	8.5	40	22	M8	16	16.8	13	25
321788	NTR-HD-SST-p-M8x50-PL-E	8.5	50	22	M8	16	16.8	13	29
321793	NTR-HD-SST-p-M8x60-PL-E	8.5	60	22	M8	16	16.8	13	33
321627	NTR-HD-SST-p-M10x20-PL-E	9.5	20	-	M10	19	19.8	16	28
321637	NTR-HD-SST-p-M10x25-PL-E	9.5	25	-	M10	19	19.8	16	31
321647	NTR-HD-SST-p-M10x30-PL-E	9.5	30	-	M10	19	19.8	16	34
321657	NTR-HD-SST-p-M10x40-PL-E	9.5	40	26	M10	19	19.8	16	40
321667	NTR-HD-SST-p-M10x50-PL-E	9.5	50	26	M10	19	19.8	16	46
321978	NTR-HD-SST-p-M10x60-PL-E	9.5	60	26	M10	19	19.8	16	52
321677	NTR-HD-SST-p-M12x25-PL-E	11	25	-	M12	22	22.8	18	46
321687	NTR-HD-SST-p-M12x30-PL-E	11	30	-	M12	22	22.8	18	50
321697	NTR-HD-SST-p-M12x40-PL-E	11	40	30	M12	22	22.8	18	59
321707	NTR-HD-SST-p-M12x50-PL-E	11	50	30	M12	22	22.8	18	68
321717	NTR-HD-SST-p-M12x60-PL-E	11	60	30	M12	22	22.8	18	76
321727	NTR-HD-SST-p-M16x30-PL-E	13	30	-	M16	28	28.8	22	90
321737	NTR-HD-SST-p-M16x40-PL-E	13	40	-	M16	28	28.8	22	106
321747	NTR-HD-SST-p-M16x50-PL-E	13	50	38	M16	28	28.8	22	122
321757	NTR-HD-SST-p-M16x60-PL-E	13	60	38	M16	28	28.8	22	137
321767	NTR-HD-SST-p-M16x70-PL-E	13	70	38	M16	28	28.8	22	153
321983	NTR-HD-SST-p-M20x40-PL-E	15	40	-	M20	34	34.8	27	172
321988	NTR-HD-SST-p-M20x60-PL-E	15	60	46	M20	34	34.8	27	221

NTR-HD-SST-PL-F

INOX STAINLESS STEEL

Code	Description	L	l_1	l_2	d_1	d_2	d_3	s	⚖
321992	NTR-HD-SST-p-M4x8-PL-F	6.5	8	-	M4	10	10.8	7	7
321994	NTR-HD-SST-p-M4x10-PL-F	6.5	10	-	M4	10	10.8	7	8
321996	NTR-HD-SST-p-M4x12-PL-F	6.5	12	-	M4	10	10.8	7	9
321998	NTR-HD-SST-p-M4x16-PL-F	6.5	16	14	M4	10	10.8	7	10
322000	NTR-HD-SST-p-M4x20-PL-F	6.5	20	14	M4	10	10.8	7	11
322002	NTR-HD-SST-p-M4x25-PL-F	6.5	25	14	M4	10	10.8	7	12
322004	NTR-HD-SST-p-M4x30-PL-F	6.5	30	14	M4	10	10.8	7	13
322006	NTR-HD-SST-p-M5x10-PL-F	7	10	-	M5	11	11.8	8	6
320865	NTR-HD-SST-p-M5x12-PL-F	7	12	-	M5	11	11.8	8	5
322008	NTR-HD-SST-p-M5x16-PL-F	7	16	-	M5	11	11.8	8	10
322010	NTR-HD-SST-p-M5x20-PL-F	7	20	16	M5	11	11.8	8	7
322012	NTR-HD-SST-p-M5x25-PL-F	7	25	16	M5	11	11.8	8	11
322014	NTR-HD-SST-p-M5x30-PL-F	7	30	16	M5	11	11.8	8	14
322016	NTR-HD-SST-p-M5x35-PL-F	7	35	16	M5	11	11.8	8	15
322018	NTR-HD-SST-p-M5x40-PL-F	7	40	16	M5	11	11.8	8	16
322020	NTR-HD-SST-p-M6x12-PL-F	7.5	12	-	M6	13	13.8	10	8
322022	NTR-HD-SST-p-M6x16-PL-F	7.5	16	-	M6	13	13.8	10	9
322024	NTR-HD-SST-p-M6x20-PL-F	7.5	20	-	M6	13	13.8	10	10
322026	NTR-HD-SST-p-M6x25-PL-F	7.5	25	-	M6	13	13.8	10	11
322028	NTR-HD-SST-p-M6x30-PL-F	7.5	30	18	M6	13	13.8	10	12
322030	NTR-HD-SST-p-M6x35-PL-F	7.5	35	18	M6	13	13.8	10	13
322032	NTR-HD-SST-p-M6x40-PL-F	7.5	40	18	M6	13	13.8	10	14
322034	NTR-HD-SST-p-M6x50-PL-F	7.5	50	18	M6	13	13.8	10	16
322036	NTR-HD-SST-p-M8x16-PL-F	8.5	16	-	M8	16	16.8	13	17
322038	NTR-HD-SST-p-M8x20-PL-F	8.5	20	-	M8	16	16.8	13	18
322040	NTR-HD-SST-p-M8x25-PL-F	8.5	25	-	M8	16	16.8	13	19
322042	NTR-HD-SST-p-M8x30-PL-F	8.5	30	-	M8	16	16.8	13	21
322044	NTR-HD-SST-p-M8x40-PL-F	8.5	40	22	M8	16	16.8	13	25
322046	NTR-HD-SST-p-M8x50-PL-F	8.5	50	22	M8	16	16.8	13	29
322048	NTR-HD-SST-p-M8x60-PL-F	8.5	60	22	M8	16	16.8	13	33
322050	NTR-HD-SST-p-M10x20-PL-F	9.5	20	-	M10	19	19.8	16	28
322052	NTR-HD-SST-p-M10x25-PL-F	9.5	25	-	M10	19	19.8	16	31
322054	NTR-HD-SST-p-M10x30-PL-F	9.5	30	-	M10	19	19.8	16	34
322056	NTR-HD-SST-p-M10x40-PL-F	9.5	40	26	M10	19	19.8	16	40
322058	NTR-HD-SST-p-M10x50-PL-F	9.5	50	26	M10	19	19.8	16	46
322060	NTR-HD-SST-p-M10x60-PL-F	9.5	60	26	M10	19	19.8	16	52
322062	NTR-HD-SST-p-M12x25-PL-F	11	25	-	M12	22	22.8	18	46
322064	NTR-HD-SST-p-M12x30-PL-F	11	30	-	M12	22	22.8	18	50
322066	NTR-HD-SST-p-M12x40-PL-F	11	40	30	M12	22	22.8	18	59
322068	NTR-HD-SST-p-M12x50-PL-F	11	50	30	M12	22	22.8	18	68
322070	NTR-HD-SST-p-M12x60-PL-F	11	60	30	M12	22	22.8	18	76
322072	NTR-HD-SST-p-M16x30-PL-F	13	30	-	M16	28	28.8	22	90
322074	NTR-HD-SST-p-M16x40-PL-F	13	40	-	M16	28	28.8	22	106
322076	NTR-HD-SST-p-M16x50-PL-F	13	50	38	M16	28	28.8	22	122
322078	NTR-HD-SST-p-M16x60-PL-F	13	60	38	M16	28	28.8	22	137
322080	NTR-HD-SST-p-M16x70-PL-F	13	70	38	M16	28	28.8	22	153
322082	NTR-HD-SST-p-M20x40-PL-F	15	40	-	M20	34	34.8	27	172
322084	NTR-HD-SST-p-M20x60-PL-F	15	60	46	M20	34	34.8	27	221

Models all rights reserved in accordance with the law. Always mention the source when reproducing our drawings and photos.