Crank handles

Technopolymer

METRIC

RoHS PA +90° 0°

MATERIAL

Glass-fibre reinforced polyamide based (PA) technopolymer, black colour, matte finish.

STANDARD EXECUTIONS

Black-oxide steel boss, H9 reamed hole.

- **MT-AT**: with revolving handle I.621+x (see page 406) in technopolymer, not removable.
- **MT-AT+IR**: with fold-away handle IR.620 (see page 414) in technopolymer.

FEATURES AND APPLICATIONS

The reticular structure of the crank arm and the technopolymer used make this handle very strong and therefore suitable for transmitting high torque values.

SPECIAL EXECUTIONS ON REQUEST

Crank handles with cross holes according to EN 110 (see page -A-16 ·).



ELESA Original design

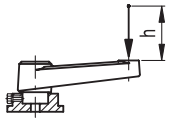

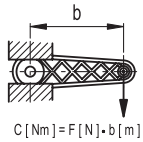

Conversion Table
1 mm = 0.039 inch

R	
mm	inch
50	1.95
64	2.50
80	3.12
100	3.90
130	5.07
160	6.24

MT-AT

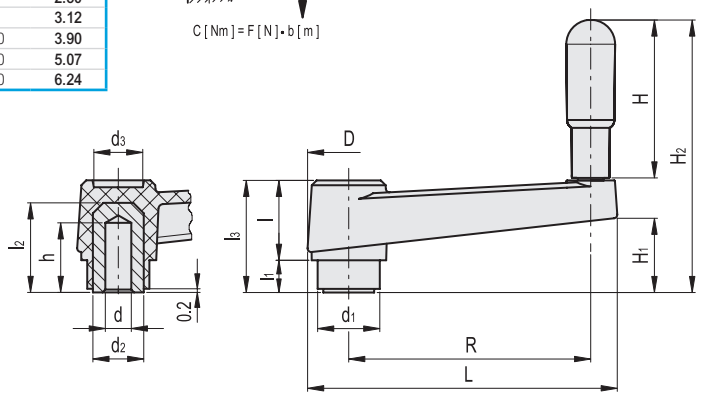

MT-AT+IR

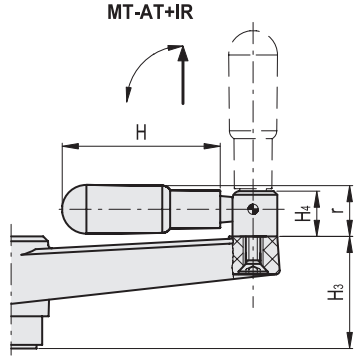

METRIC

MT-AT

Code	Description	R	dH9	L	D	d1	d2	d3	l	l1	l2	l3	h	H	H1	H2	R	C# [Nm]	L# [J]	⚖
44053	MT.50-AT	50	6	69	22.5	18	15	13	20.5	9	23	29.5	18	35	18.5	66	50	80	7	58
44113	MT.64-AT	64	8	86	26.5	20	15	16	22.5	9	25	31.5	20	45	17.5	78	64	120	11	84
44213	MT.80-AT	80	10	106	30	24	18	17	26	11	31	37	25	60	23.5	99	80	200	15	121
44313	MT.100-AT	100	12	128	33.5	24	18	21	30.5	10	31	40.5	24	65	25	106	100	210	27	192
44413	MT.130-AT	130	14	162	39	34	26	25	35	14	43	49	30	65	32.5	113	130	350	45	338
44513	MT.160-AT	160	16	197	44	34.5	26	27	39.5	15	43	54.5	30	80	36	136	160	470	55	387

MT-AT+IR

Code	Description	R	dH9	L	D	d1	d2	d3	l	l1	l2	l3	h	H	H1	H3	H4	R	r	C# [Nm]	L# [J]	⚖
44117	MT.64-AT+IR	64	8	86	26.5	20	15	16	22.5	9	25	31.5	20	45	17.5	31	14	64	16	120	11	91
44217	MT.80-AT+IR	80	10	106	30	24	18	17	26	11	31	37	25	60	23.5	37	14	80	16.5	200	15	124
44317	MT.100-AT+IR	100	12	128	33.5	24	18	21	30.5	10	31	40.5	24	65	25	39	18.5	100	20.5	210	27	187
44417	MT.130-AT+IR	130	14	162	39	34	26	25	35	14	43	49	30	65	34	49	18.5	130	20.5	350	45	333
44517	MT.160-AT+IR	160	16	197	44	34.5	26	27	39.5	15	43	54.5	30	80	36	54	18.5	160	22	470	55	384

For maximum torque (C) and impact strength (L) see Technical data on page A-3.

7/2025

Models all rights reserved in accordance with the law. Always mention the source when reproducing our drawings and photos.