STANDARD COMPONENTS

- **MSX-B base**: glass-fibre reinforced polyamide based (PA) technopolymer, black colour, matte finish. Fitting by means of a stainless steel M5 cylindrical-head screw with hexagon socket and nut.
- **MSX-C T-shaped clamp**: glass-fibre reinforced technopolymer, black colour, matte finish. Fitting by means of stainless steel M5 cylindrical-head screws with hexagon socket and nuts.
- **MSX-TA-TB-TC-TD-TE-TF device clamps**: glass-fibre reinforced technopolymer, black colour, matte finish. Fitting by means of a stainless steel M5 cylindrical-head screw with hexagon socket and nut.

FEATURES AND APPLICATIONS

The geometry of the holes of MSX. series connecting clamps are designed to fit both tubes with round cross section and tubes with square cross section; the latter prevents the elements from rotating (see Fig. 1).

ASSEMBLY INSTRUCTIONS

1. Assemble the base by means of 2 M6 cylindrical head screws with hexagon socket (not supplied).
2. Fit the connecting tube into the hole of the base and clamp it by screwing the set screw. Suggested tightening torque 5Nm.
3. Insert the connecting tube in the shaped hole of the two-way clamp.
4. Fit the other connecting tube into the hole of the two-way clamp.
5. Fit on the connecting tube the proper device clamp, chosen within the six available. After the positioning of the components, clamp them by screwing the set screws. Suggested tightening torque 5Nm.



FM design

Fig.1

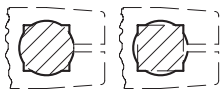



Assembly instructions

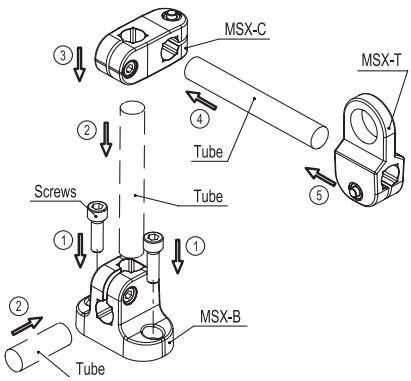

Models all rights reserved in accordance with the law. Always mention the source when reproducing our drawings and photos.

Conversion Table *1 mm = 0.039 inch*			
d		s	
mm	inch	mm	inch
10	**0.39**	8	**0.31**
12	**0.47**	10	**0.39**
14	**0.55**	12	**0.47**



MSX-B

METRIC

Code	Description	s	d	Pull out resistance# [N]	Rotation resistance# [Nm]	⚖
440101	MSX.56-B-8-10	8	10	900	4	34
440102	MSX.56-B-10-12	10	12	1000	4.5	33
440103	MSX.56-B-12-14	12	14	1100	5	29



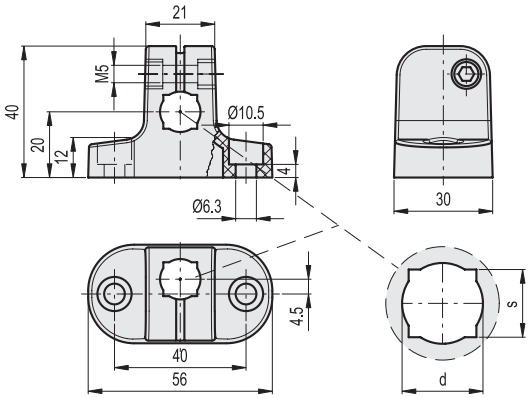

MSX-C

METRIC

Code	Description	s	d	Pull out resistance# [N]	Rotation resistance# [Nm]	⚖
440121	MSX.56-C-8-10	8	10	900	4.5	29
440122	MSX.56-C-10-12	10	12	1000	5	27
440123	MSX.56-C-12-14	12	14	1100	5.5	25



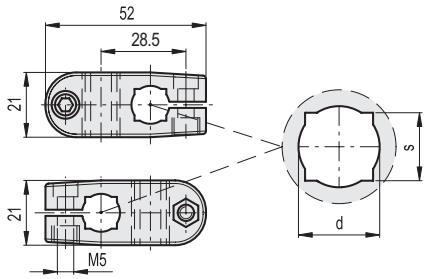

MSX-TA-TB-TC-TD-TE-TF

METRIC

Code	Description	s	d	Pull out resistance# [N]	Rotation resistance# [Nm]	⚖
440131	MSX.56-TA-8-10	8	10	900	4	27
440132	MSX.56-TA-10-12	10	12	1000	4.5	22
440133	MSX.56-TA-12-14	12	14	1100	5	21
440135	MSX.56-TB-8-10	8	10	900	4	26
440136	MSX.56-TB-10-12	10	12	1000	4.5	24
440137	MSX.56-TB-12-14	12	14	1100	5	23
440139	MSX.56-TC-8-10	8	10	900	4	25
440140	MSX.56-TC-10-12	10	12	1000	4.5	24
440141	MSX.56-TC-12-14	12	14	1100	5	26
440143	MSX.56-TD-8-10	8	10	900	4	28
440144	MSX.56-TD-10-12	10	12	1000	4.5	27
440145	MSX.56-TD-12-14	12	14	1100	5	22
440147	MSX.56-TE-8-10	8	10	900	4	23
440148	MSX.56-TE-10-12	10	12	1000	4.5	26
440149	MSX.56-TE-12-14	12	14	1100	5	21
440151	MSX.56-TF-8-10	8	10	900	4	24
440152	MSX.56-TF-10-12	10	12	1000	4.5	27
440153	MSX.56-TF-12-14	12	14	1100	5	22

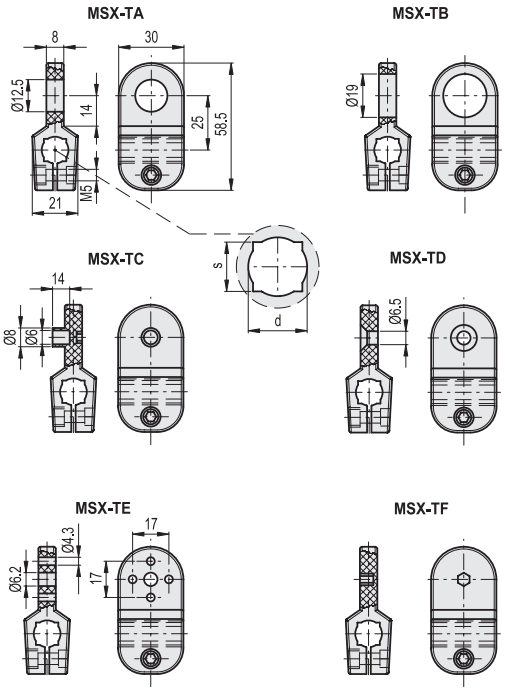

Tests carried out with round tube.

Models all rights reserved in accordance with the law. Always mention the source when reproducing our drawings and photos.