Folding handle with recessed tray

with return spring, technopolymer certified self-extinguish

METRIC

MATERIAL

Glass-fibre reinforced polyamide based (PA) technopolymer certified self-extinguishing UL-94 V0, black colour, matte finish.

STANDARD EXECUTION

Pass-through holes for M4 countersunk-head screws (not supplied).

ROTATION PIN AND RETURN SPRINGS

AISI 303 stainless steel pin, AISI 302 stainless steel springs.

TECHNICAL DATA

The "V0" certification in accordance with UL-94 V (Underwriters Laboratories) (see Technical Data on page A-5) indicates that on a plastic test sample with specific shape and dimensions, in the vertical position, the flame is extinguished within 10 seconds, without generating any incandescent drops.
The lifting resistance (F1) and tensile strength (F2) values reported in the table are the result of permanent deformation by means of the appropriate dynamometric equipment under the test conditions shown in the figure with ambient temperature.

ASSEMBLY INSTRUCTION

Drill the handle housing according to the template dimensions.



ELESA Original design

Drilling template

(remove all drilling burrs before fitting the handle)

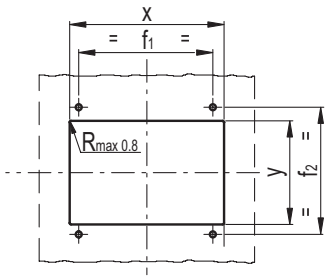

x	y	f1	f2
135.6+0,1	65.4+0,1	116,4+/-0,1	79,3+/-0,1

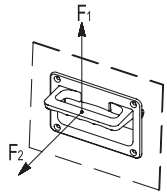

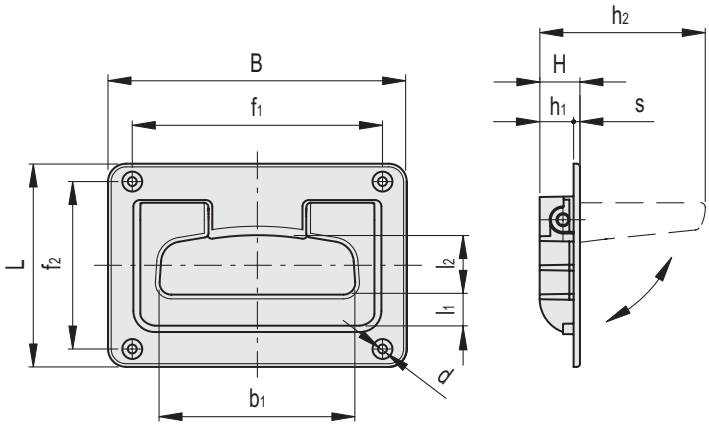

Conversion Table	
1 mm = 0.039 inch	
L	
mm	inch
141.5	5.52

METRIC

Code	Description	B	f1	f2	L	H	h1	h2	b1	l1	l2	s	d	F1 [N]	F2 [N]	⚖
150501	MPR.141-AE-V0-C9	141.5	118.5	79	96	19	16	63	90	16.5	29	3	4.2	1900	1900	148

Models all rights reserved in accordance with the law. Always mention the source when reproducing our drawings and photos.