METRIC

RoHS PA +100° -30° SBR +70° -30°

BASE
Polyamide based (PA) technopolymer with adjusting hexagon, black colour, matte finish.

STANDARD EXECUTIONS
- **LX**: zinc-plated steel threaded stem.
- **LX-S**: zinc-plated steel threaded stem, base with screwdriver slot.
- **LX-AS**: zinc-plated steel threaded stem, base with SBR rubber no-slip disk, supplied assembled to the base.



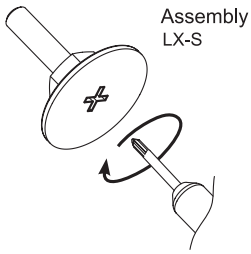

LX. **LX-S**

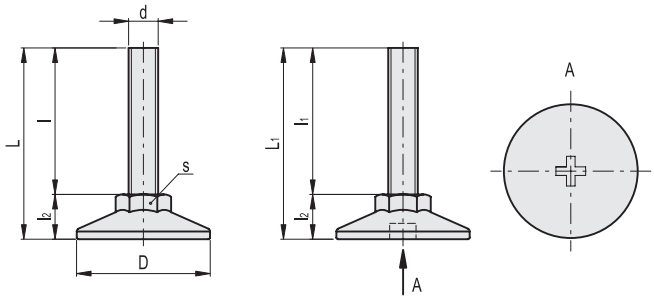

Conversion Table	
1 mm = 0.039 inch	
D	
mm	**inch**
25	**0.98**

LX **LX-S**

METRIC

Code	Description	Code	Description	D	d	L	L1	l	l1	l2	s	Max. limit static load* [N]	⚖
431001	LX.25-SW13-M6x24	431001-S	LX.25-SW13-M6x26-S	25	M6	35	37	24	26	11	13	1500	10
431003	LX.25-SW13-M6x34	431003-S	LX.25-SW13-M6x36-S	25	M6	45	47	34	36	11	13	1500	11
431005	LX.25-SW13-M6x54	431005-S	LX.25-SW13-M6x56-S	25	M6	65	67	54	56	11	13	1500	15
431007	LX.25-SW13-M6x62	431007-S	LX.25-SW13-M6x64-S	25	M6	73	75	62	64	11	13	1500	16
431011	LX.25-SW13-M8x17	431011-S	LX.25-SW13-M8x19-S	25	M8	28	30	17	19	11	13	2500	12
431013	LX.25-SW13-M8x22	431013-S	LX.25-SW13-M8x24-S	25	M8	33	35	22	24	11	13	2500	13
431015	LX.25-SW13-M8x32	431015-S	LX.25-SW13-M8x32-S	25	M8	43	45	32	32	11	13	2500	16
431017	LX.25-SW13-M8x52	431017-S	LX.25-SW13-M8x54-S	25	M8	63	65	52	54	11	13	2500	23
431019	LX.25-SW13-M8x72	431019-S	LX.25-SW13-M8x74-S	25	M8	83	85	72	74	11	13	2500	28

* The max static load is the value above which the load applied to the element may cause some plastic material breakage, in particular conditions of use. Obviously, a factor that takes into consideration the importance and the safety level of the specific application must be applied to this value.

Models all rights reserved in accordance with the law. Always mention the source when reproducing our drawings and photos.

LX.

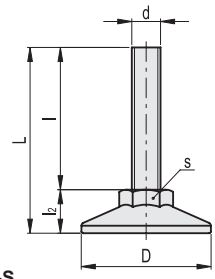

LX-S

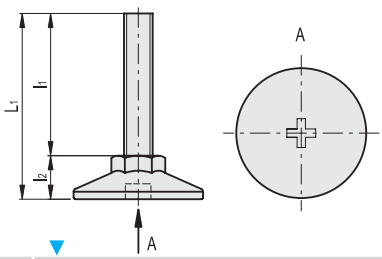

Conversion Table *1 mm = 0.039 inch*	
D	
mm	inch
30	1.18
40	1.57
50	1.97
60	3.15

LX **LX-S**

METRIC

Code	Description	Code	Description	D	d	L	L1	l	l1	l2	s	Max. limit static load * [N]	⚖
431051	LX.30-SW17-M6x22	431051-S	LX.30-SW17-M6x26-S	30	M6	35	38	23	26	12	17	1500	12
431053	LX.30-SW17-M6x32	431053-S	LX.30-SW17-M6x36-S	30	M6	45	48	33	36	12	17	1500	14
431055	LX.30-SW17-M6x52	431055-S	LX.30-SW17-M6x56-S	30	M6	65	68	53	56	12	17	1500	17
431057	LX.30-SW17-M8x16	431057-S	LX.30-SW17-M8x18-S	30	M8	28	31	16	19	12	17	2500	12
431059	LX.30-SW17-M8x21	431059-S	LX.30-SW17-M8x23-S	30	M8	33	36	21	24	12	17	2500	15
431061	LX.30-SW17-M8x31	431061-S	LX.30-SW17-M8x33-S	30	M8	43	46	31	34	12	17	2500	18
431063	LX.30-SW17-M8x51	431063-S	LX.30-SW17-M8x53-S	30	M8	63	66	51	54	12	17	2500	25
431065	LX.30-SW17-M8x71	431065-S	LX.30-SW17-M8x73-S	30	M8	83	86	71	74	12	17	2500	30
431067	LX.30-SW17-M10x16	431067-S	LX.30-SW17-M10x18-S	30	M10	28	31	16	19	12	17	3000	18
431069	LX.30-SW17-M10x21	431069-S	LX.30-SW17-M10x23-S	30	M10	33	36	21	24	12	17	3000	19
431071	LX.30-SW17-M10x31	431071-S	LX.30-SW17-M10x33-S	30	M10	43	46	31	34	12	17	3000	25
431073	LX.30-SW17-M10x41	431073-S	LX.30-SW17-M10x43-S	30	M10	53	56	41	44	12	17	3000	30
431075	LX.30-SW17-M10x51	431075-S	LX.30-SW17-M10x53-S	30	M10	63	66	51	54	12	17	3000	35
431077	LX.30-SW17-M10x61	431077-S	LX.30-SW17-M10x63-S	30	M10	73	76	61	64	12	17	3000	40
431079	LX.30-SW17-M10x71	431079-S	LX.30-SW17-M10x73-S	30	M10	83	86	71	74	12	17	3000	45
431031	LX.40-SW17-M8x12	431031-S	LX.40-SW17-M8x14-S	40	M8	24.5	26.5	11.5	13	13.5	17	2500	17
431033	LX.40-SW17-M8x20	431033-S	LX.40-SW17-M8x22-S	40	M8	32.5	34.5	19.5	21	13.5	17	2500	19
431035	LX.40-SW17-M8x30	431035-S	LX.40-SW17-M8x32-S	40	M8	42.5	44.5	29.5	31	13.5	17	2500	22
431037	LX.40-SW17-M8x50	431037-S	LX.40-SW17-M8x52-S	40	M8	62.5	64.5	49.5	51	13.5	17	2500	28
431039	LX.40-SW17-M8x70	431039-S	LX.40-SW17-M8x72-S	40	M8	82.5	84.5	69.5	71	13.5	17	2500	34
431041	LX.40-SW17-M10x20	431041-S	LX.40-SW17-M10x22-S	40	M10	32	34	18.5	21	13.5	17	3000	24
431042	LX.40-SW17-M10x30	431042-S	LX.40-SW17-M10x32-S	40	M10	42	44	28.5	31	13.5	17	3000	29
431043	LX.40-SW17-M10x40	431043-S	LX.40-SW17-M10x42-S	40	M10	52	54	38.5	41	13.5	17	3000	34
431044	LX.40-SW17-M10x50	431044-S	LX.40-SW17-M10x52-S	40	M10	62	64	48.5	51	13.5	17	3000	38
431045	LX.40-SW17-M10x60	431045-S	LX.40-SW17-M10x62-S	40	M10	72	74	58.5	61	13.5	17	3000	53
431046	LX.40-SW17-M10x70	431046-S	LX.40-SW17-M10x72-S	40	M10	82	84	68.5	71	13.5	17	3000	48
431049	LX.40-SW17-M10x100	431049-S	LX.40-SW17-M10x102-S	40	M10	112.5	114.5	99	101	13.5	17	3000	63
431047	LX.40-SW17-M12x50	431047-S	LX.40-SW17-M12x52-S	40	M12	62.5	64.5	49	51	13.5	17	5000	51
431048	LX.40-SW17-M12x70	431048-S	LX.40-SW17-M12x72-S	40	M12	82.5	84.5	69	71	13.5	17	5000	64
431050	LX.40-SW17-M12x100	431050-S	LX.40-SW17-M12x102-S	40	M12	112.5	114.5	99	101	13.5	17	5000	87
431081	LX.50-SW19-M10x46	431081-S	LX.50-SW19-M10x51-S	50	M10	64	66	47	49	17	19	3000	47
431082	LX.50-SW19-M10x66	431082-S	LX.50-SW19-M10x71-S	50	M10	84	86	67	69	17	19	3000	57
431083	LX.50-SW19-M10x96	431083-S	LX.50-SW19-M10x101-S	50	M10	114	116	97	99	17	19	3000	71
431084	LX.50-SW19-M12x46	431084-S	LX.50-SW19-M12x51-S	50	M12	64	66	47	49	17	19	5000	60
431085	LX.50-SW19-M12x66	431085-S	LX.50-SW19-M12x71-S	50	M12	84	86	67	69	17	19	5000	74
431086	LX.50-SW19-M12x96	431086-S	LX.50-SW19-M12x101-S	50	M12	114	116	97	99	17	19	5000	95
431091	LX.60-SW24-M12x44	431091-S	LX.60-SW24-M12x48-S	60	M12	64.5	64.5	45.5	47.5	19	24	5000	71
431092	LX.60-SW24-M12x64	431092-S	LX.60-SW24-M12x68-S	60	M12	84.5	84.5	65.5	67.5	19	24	5000	83
431093	LX.60-SW24-M12x94	431093-S	LX.60-SW24-M12x98-S	60	M12	114.5	114.5	95.5	97.5	19	24	5000	106
431094	LX.60-SW24-M16x68	431094-S	LX.60-SW24-M16x69-S	60	M16	87	84.5	68	70	19	24	7500	130
431095	LX.60-SW24-M16x108	431095-S	LX.60-SW24-M16x109-S	60	M16	127	124.5	108	110	19	24	7500	183
431096	LX.60-SW24-M16x148	431096-S	LX.60-SW24-M16x149-S	60	M16	167	164.5	148	150	19	24	7500	235

* The max static load is the value above which the load applied to the element may cause some plastic material breakage, in particular conditions of use. Obviously, a factor that takes into consideration the importance and the safety level of the specific application must be applied to this value..

Models all rights reserved in accordance with the law. Always mention the source when reproducing our drawings and photos.

Conversion Table *1 mm = 0.039 inch*	
D	
mm	inch
25	0.98
30	1.18
40	1.57
50	1.97
60	3.15

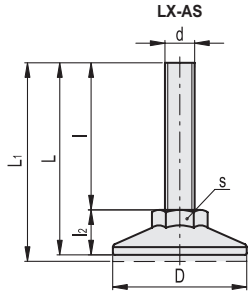

LX-AS

METRIC

Code	Description	D	d	L	L1	l	l2	s	Max. limit static load* [N]	⚖
531001	LX.25-SW13-AS-M6x24	25	M6	35	36	24	11	13	1500	11
531003	LX.25-SW13-AS-M6x34	25	M6	45	46	34	11	13	1500	12
531005	LX.25-SW13-AS-M6x54	25	M6	65	66	54	11	13	1500	16
531007	LX.25-SW13-AS-M6x62	25	M6	73	74	62	11	13	1500	17
531011	LX.25-SW13-AS-M8x17	25	M8	28	29	17	11	13	2500	13
531013	LX.25-SW13-AS-M8x22	25	M8	33	34	22	11	13	2500	14
531015	LX.25-SW13-AS-M8x32	25	M8	43	44	32	11	13	2500	17
531017	LX.25-SW13-AS-M8x52	25	M8	63	64	52	11	13	2500	24
531019	LX.25-SW13-AS-M8x72	25	M8	83	84	72	11	13	2500	29
531051	LX.30-SW17-AS-M6x22	30	M6	34	35	22	12	17	1500	13
531053	LX.30-SW17-AS-M6x32	30	M6	44	45	32	12	17	1500	15
531055	LX.30-SW17-AS-M6x52	30	M6	64	65	52	12	17	1500	18
531057	LX.30-SW17-AS-M8x16	30	M8	28	29	16	12	17	2500	13
531059	LX.30-SW17-AS-M8x21	30	M8	33	34	21	12	17	2500	16
531061	LX.30-SW17-AS-M8x31	30	M8	42	43	31	12	17	2500	19
531063	LX.30-SW17-AS-M8x51	30	M8	63	64	51	12	17	2500	26
531065	LX.30-SW17-AS-M8x71	30	M8	83	84	71	12	17	2500	31
531067	LX.30-SW17-AS-M10x16	30	M10	28	29	16	12	17	3000	19
531069	LX.30-SW17-AS-M10x21	30	M10	33	34	21	12	17	3000	20
531071	LX.30-SW17-AS-M10x31	30	M10	43	44	31	12	17	3000	26
531073	LX.30-SW17-AS-M10x41	30	M10	53	54	41	12	17	3000	31
531075	LX.30-SW17-AS-M10x51	30	M10	63	65	51	12	17	3000	36
531077	LX.30-SW17-AS-M10x61	30	M10	73	74	61	12	17	3000	41
531079	LX.30-SW17-AS-M10x71	30	M10	83	84	71	12	17	3000	46
531031	LX.40-SW17-AS-M8x12	40	M8	24.5	25.5	11.5	13	17	2500	18
531033	LX.40-SW17-AS-M8x20	40	M8	32.5	33.5	19.5	13	17	2500	20
531035	LX.40-SW17-AS-M8x30	40	M8	42.5	43.5	29.5	13	17	2500	23
531037	LX.40-SW17-AS-M8x50	40	M8	62.5	63.5	49.5	13	17	2500	29
531039	LX.40-SW17-AS-M8x70	40	M8	82.5	83.5	69.5	13	17	2500	35
531041	LX.40-SW17-AS-M10x20	40	M10	32.5	33.5	19.5	13	17	3000	25
531042	LX.40-SW17-AS-M10x30	40	M10	42.5	43.5	29.5	13	17	3000	30
531043	LX.40-SW17-AS-M10x40	40	M10	52.5	53.5	39.5	13	17	3000	35
531044	LX.40-SW17-AS-M10x50	40	M10	62.5	63.5	49.5	13	17	3000	39
531045	LX.40-SW17-AS-M10x60	40	M10	72.5	73.5	59.5	13	17	3000	54
531046	LX.40-SW17-AS-M10x70	40	M10	82.5	83.5	69.5	13	17	3000	49
531047	LX.40-SW17-AS-M10x100	40	M10	112.5	113.5	99.5	13	17	3000	64
531048	LX.40-SW17-AS-M12x50	40	M12	62.5	63.5	49.5	13	17	5000	52
531049	LX.40-SW17-AS-M12x70	40	M12	82.5	83.5	69.5	13	17	5000	65
531050	LX.40-SW17-AS-M12x100	40	M12	112.5	113.5	99.5	13	17	5000	88
531081	LX.50-SW19-AS-M10x46	50	M10	62.5	63.5	45.5	17	19	3000	48
531082	LX.50-SW19-AS-M10x66	50	M10	82.5	83.5	65.5	17	19	3000	58
531083	LX.50-SW19-AS-M10x96	50	M10	112.5	113.5	95.5	17	19	3000	72
531084	LX.50-SW19-AS-M12x46	50	M12	62.5	63.5	45.5	17	19	5000	61
531085	LX.50-SW19-AS-M12x66	50	M12	82.5	83.5	65.5	17	19	5000	75
531086	LX.50-SW19-AS-M12x96	50	M12	112.5	113.5	95.5	17	19	5000	96
531091	LX.60-SW24-AS-M12x44	60	M12	62.5	63.5	43.5	19	24	5000	72
531092	LX.60-SW24-AS-M12x64	60	M12	82.5	83.5	63.5	19	24	5000	84
531093	LX.60-SW24-AS-M12x94	60	M12	112.5	113.5	93.5	19	24	5000	107
531094	LX.60-SW24-AS-M16x64	60	M16	82.5	83.5	63.5	19	24	7500	131
531095	LX.60-SW24-AS-M16x104	60	M16	122.5	123.5	103.5	19	24	7500	184
531096	LX.60-SW24-AS-M16x144	60	M16	162.5	163.5	143.5	19	24	7500	236

* The max static load is the value above which the load applied to the element may cause some plastic material breakage, in particular conditions of use. Obviously, a factor that takes into consideration the importance and the safety level of the specific application must be applied to this value.

Models all rights reserved in accordance with the law. Always mention the source when reproducing our drawings and photos.