METRIC · INOX STAINLESS STEEL · RoHS · PA · +100° -30° · SBR · +70° -30°

BASE
Polyamide based (PA) technopolymer with adjusting hexagon, black colour, matte finish.

STANDARD EXECUTIONS
- **LX-SST**: AISI 304 stainless steel threaded stem.
- **LX-SST-S**: AISI 304 stainless steel threaded stem, base with screwdriver slot.
- **LX-AS-SST**: AISI 304 stainless steel threaded stem, base with SBR rubber no-slip disk, supplied assembled to the base.

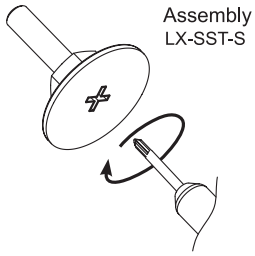



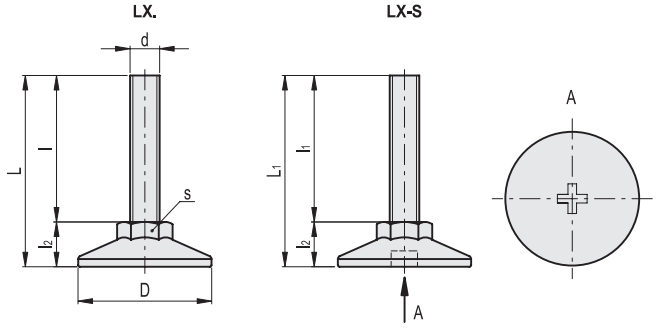

Conversion Table *1 mm = 0.039 inch*	
D	
mm	**inch**
25	**0.98**

LX-SST **LX-SST-S** ▼ INOX STAINLESS STEEL METRIC

Code	Description	Code	Description	D	d	L	L1	l	l1	l2	s	Max. limit static load* [N]	⚖
431101	LX.25-SW13-SST-M6x24	431101-S	LX.25-SW13-SST-M6x26-S	25	M6	35	37	24	26	11	13	1500	10
431103	LX.25-SW13-SST-M6x34	431103-S	LX.25-SW13-SST-M6x36-S	25	M6	45	47	34	36	11	13	1500	11
431105	LX.25-SW13-SST-M6x54	431105-S	LX.25-SW13-SST-M6x56-S	25	M6	65	67	54	56	11	13	1500	14
431113	LX.25-SW13-SST-M8x22	431113-S	LX.25-SW13-SST-M8x24-S	25	M8	35	37	24	26	11	13	2500	13
431115	LX.25-SW13-SST-M8x32	431115-S	LX.25-SW13-SST-M8x34-S	25	M8	43	45	32	34	11	13	2500	17
431117	LX.25-SW13-SST-M8x52	431117-S	LX.25-SW13-SST-M8x54-S	25	M8	63	65	52	54	11	13	2500	22

* The max static load is the value above which the load applied to the element may cause some plastic material breakage, in particular conditions of use. Obviously, a factor that takes into consideration the importance and the safety level of the specific application must be applied to this value.

Models all rights reserved in accordance with the law. Always mention the source when reproducing our drawings and photos.

LX-SST

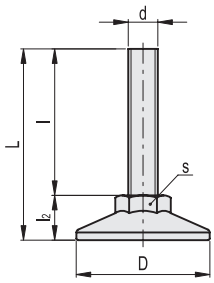

LX-SST-S

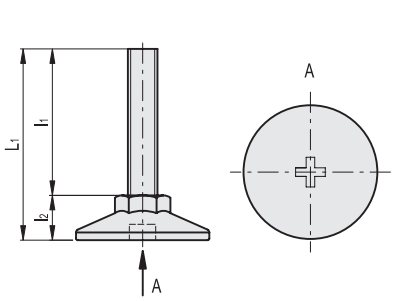

Conversion Table
1 mm = 0.039 inch

D	
mm	**inch**
30	**1.18**
40	**1.57**
50	**1.97**
60	**3.15**

LX-SST **LX-SST-S**

INOX STAINLESS STEEL METRIC

Code	Description	Code	Description	D	d	L	L1	l	l1	l2	s	Max. limit static load* [N]	⚖
431151	LX.30-SW17-SST-M6x22	431151-S	LX.30-SW17-SST-M6x26-S	30	M6	35	38	23	26	12	17	1500	11
431153	LX.30-SW17-SST-M6x32	431153-S	LX.30-SW17-SST-M6x36-S	30	M6	45	48	33	36	12	17	1500	13
431155	LX.30-SW17-SST-M6x52	431155-S	LX.30-SW17-SST-M6x56-S	30	M6	65	68	53	56	12	17	1500	17
431159	LX.30-SW17-SST-M8x21	431159-S	LX.30-SW17-SST-M8x23-S	30	M8	33	35	21	24	12	17	2500	15
431161	LX.30-SW17-SST-M8x31	431161-S	LX.30-SW17-SST-M8x33-S	30	M8	43	45	31	34	12	17	2500	19
431163	LX.30-SW17-SST-M8x51	431163-S	LX.30-SW17-SST-M8x53-S	30	M8	63	65	51	54	12	17	2500	25
431171	LX.30-SW17-SST-M10x31	431171-S	LX.30-SW17-SST-M10x33-S	30	M10	43	45	31	34	12	17	3000	26
431175	LX.30-SW17-SST-M10x51	431175-S	LX.30-SW17-SST-M10x53-S	30	M10	63	65	51	54	12	17	3000	35
431179	LX.30-SW17-SST-M10x71	431179-S	LX.30-SW17-SST-M10x73-S	30	M10	83	85	71	74	12	17	3000	45
431133	LX.40-SW17-SST-M8x20	431133-S	LX.40-SW17-SST-M8x22-S	40	M8	33	34.5	19.5	21	13.5	17	2500	20
431135	LX.40-SW17-SST-M8x30	431135-S	LX.40-SW17-SST-M8x32-S	40	M8	43	44.5	29.5	31	13.5	17	2500	23
431137	LX.40-SW17-SST-M8x50	431137-S	LX.40-SW17-SST-M8x52-S	40	M8	63	64.5	49.5	51	13.5	17	2500	29
431142	LX.40-SW17-SST-M10x30	431142-S	LX.40-SW17-SST-M10x32-S	40	M10	42	44.5	28.5	31	13.5	17	3000	30
431144	LX.40-SW17-SST-M10x50	431144-S	LX.40-SW17-SST-M10x52-S	40	M10	62	64.5	48.5	51	13.5	17	3000	39
431146	LX.40-SW17-SST-M10x70	431146-S	LX.40-SW17-SST-M10x72-S	40	M10	82	84.5	68.5	71	13.5	17	3000	49
431148	LX.40-SW17-SST-M12x50	431148-S	LX.40-SW17-SST-M12x52-S	40	M12	62.5	64.5	49	51	13.5	17	5000	51
431149	LX.40-SW17-SST-M12x70	431149-S	LX.40-SW17-SST-M12x72-S	40	M12	82.5	84.5	69	71	13.5	17	5000	67
431150	LX.40-SW17-SST-M12x100	431150-S	LX.40-SW17-SST-M12x102-S	40	M12	112.5	114.5	99	101	13.5	17	5000	87
431181	LX.50-SW19-SST-M10x46	431181-S	LX.50-SW19-SST-M10x51-S	50	M10	64	68	47	51	17	19	3000	48
431182	LX.50-SW19-SST-M10x66	431182-S	LX.50-SW19-SST-M10x71-S	50	M10	84	88	67	71	17	19	3000	68
431183	LX.50-SW19-SST-M10x96	431183-S	LX.50-SW19-SST-M10x101-S	50	M10	114	118	97	101	17	19	3000	72
431184	LX.50-SW19-SST-M12x46	431184-S	LX.50-SW19-SST-M12x51-S	50	M12	64	68	47	51	17	19	5000	67
431185	LX.50-SW19-SST-M12x66	431185-S	LX.50-SW19-SST-M12x71-S	50	M12	84	88	67	71	17	19	5000	72
431186	LX.50-SW19-SST-M12x96	431186-S	LX.50-SW19-SST-M12x101-S	50	M12	114	118	97	101	17	19	5000	79
431191	LX.60-SW24-SST-M12x44	431191-S	LX.60-SW24-SST-M12x48-S	60	M12	64.5	67	45.5	48	19	24	5000	67
431192	LX.60-SW24-SST-M12x64	431192-S	LX.60-SW24-SST-M12x68-S	60	M12	84.5	87	65.5	68	19	24	5000	85
431193	LX.60-SW24-SST-M12x94	431193-S	LX.60-SW24-SST-M12x98-S	60	M12	114.5	117	95.5	98	19	24	5000	106
431194	LX.60-SW24-SST-M16x68	431194-S	LX.60-SW24-SST-M16x69-S	60	M16	87	88	68	69	19	24	7500	132
431195	LX.60-SW24-SST-M16x108	431195-S	LX.60-SW24-SST-M16x109-S	60	M16	127	128	108	109	19	24	7500	328
431196	LX.60-SW24-SST-M16x148	431196-S	LX.60-SW24-SST-M16x149-S	60	M16	167	168	148	149	19	24	7500	238

* The max static load is the value above which the load applied to the element may cause some plastic material breakage, in particular conditions of use. Obviously, a factor that takes into consideration the importance and the safety level of the specific application must be applied to this value.

Models all rights reserved in accordance with the law. Always mention the source when reproducing our drawings and photos.





















Conversion Table
1 mm = 0.039 inch

D mm	D inch
25	0.98
30	1.18
40	1.57
50	1.97
60	3.15

LX-AS-SST

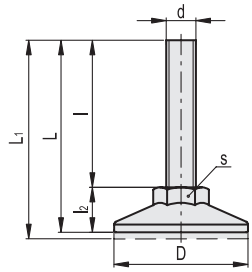

LX-AS-SST ▼ INOX STAINLESS STEEL METRIC

Code	Description	D	d	L	L1	l	l2	s	Max. limit static load* [N]	⚖
531101	LX.25-SW13-AS-SST-M6x24	25	M6	35	36	24	11	13	1500	11
531103	LX.25-SW13-AS-SST-M6x34	25	M6	45	46	34	11	13	1500	12
531105	LX.25-SW13-AS-SST-M6x54	25	M6	65	66	54	11	13	1500	15
531113	LX.25-SW13-AS-SST-M8x22	25	M8	35	36	24	11	13	2500	14
531115	LX.25-SW13-AS-SST-M8x32	25	M8	43	44	32	11	13	2500	18
531117	LX.25-SW13-AS-SST-M8x52	25	M8	63	64	52	11	13	2500	23
531151	LX.30-SW17-AS-SST-M6x22	30	M6	35	36	23	12	17	1500	12
531153	LX.30-SW17-AS-SST-M6x32	30	M6	45	46	33	12	17	1500	14
531155	LX.30-SW17-AS-SST-M6x52	30	M6	65	66	53	12	17	1500	18
531159	LX.30-SW17-AS-SST-M8x21	30	M8	33	34	21	12	17	2500	16
531161	LX.30-SW17-AS-SST-M8x31	30	M8	43	44	31	12	17	2500	20
531163	LX.30-SW17-AS-SST-M8x51	30	M8	63	64	51	12	17	2500	26
531171	LX.30-SW17-AS-SST-M10x31	30	M10	43	44	31	12	17	3000	27
531175	LX.30-SW17-AS-SST-M10x51	30	M10	63	64	51	12	17	3000	36
531179	LX.30-SW17-AS-SST-M10x71	30	M10	83	84	71	12	17	3000	46
531133	LX.40-SW17-AS-SST-M8x20	40	M8	32.5	33.5	19.5	13	17	2500	21
531135	LX.40-SW17-AS-SST-M8x30	40	M8	42.5	43.5	29.5	13	17	2500	24
531137	LX.40-SW17-AS-SST-M8x50	40	M8	62.5	63.5	49.5	13	17	2500	30
531142	LX.40-SW17-AS-SST-M10x30	40	M10	42	43	28.5	13.5	17	3000	31
531144	LX.40-SW17-AS-SST-M10x50	40	M10	62	63	48.5	13.5	17	3000	40
531146	LX.40-SW17-AS-SST-M10x70	40	M10	82	83	68.5	13.5	17	3000	50
531148	LX.40-SW17-AS-SST-M12x50	40	M12	62.5	63.5	49	13.5	17	5000	52
531149	LX.40-SW17-AS-SST-M12x70	40	M12	82.5	83.5	69	13.5	17	5000	68
531150	LX.40-SW17-AS-SST-M12x100	40	M12	112.5	113.5	99	13.5	17	5000	88
531181	LX.50-SW19-AS-SST-M10x46	50	M10	64	65	47	17	19	3000	50
531182	LX.50-SW19-AS-SST-M10x66	50	M10	84	85	67	17	19	3000	71
531183	LX.50-SW19-AS-SST-M10x96	50	M10	114	115	97	17	19	3000	78
531184	LX.50-SW19-AS-SST-M12x46	50	M12	64	65	47	17	19	5000	70
531185	LX.50-SW19-AS-SST-M12x66	50	M12	84	85	67	17	19	5000	77
531186	LX.50-SW19-AS-SST-M12x96	50	M12	114	115	97	17	19	5000	82
531191	LX.60-SW24-AS-SST-M12x44	60	M12	64.5	65.5	45.5	19	24	5000	72
531192	LX.60-SW24-AS-SST-M12x64	60	M12	84.5	85.5	65.5	19	24	5000	78
531193	LX.60-SW24-AS-SST-M12x94	60	M12	114.5	115.5	95.5	19	24	5000	87
531194	LX.60-SW24-AS-SST-M16x68	60	M16	87	88	68	19	24	7500	107
531195	LX.60-SW24-AS-SST-M16x108	60	M16	127	128	108	19	24	7500	137
531196	LX.60-SW24-AS-SST-M16x148	60	M16	167	168	148	19	24	7500	161

* The max static load is the value above which the load applied to the element may cause some plastic material breakage, in particular conditions of use. Obviously, a factor that takes into consideration the importance and the safety level of the specific application must be applied to this value.

Models all rights reserved in accordance with the law. Always mention the source when reproducing our drawings and photos.