Levelling feet

Technopolymer base, stainless steel stem

INCH

INOX STAINLESS STEEL | RoHS | PA | NBR | +212 °F -22 °F

BASE

Glass-fibre reinforced polyamide based (PA) technopolymer, black colour, matte finish.

ARTICULATED STEM

Threaded AISI 304 stainless steel with regulation hexagon.

STANDARD EXECUTIONS

- **LS.A-SST**: without no-slip disk.
- **LS.A-AS-SST**: with NBR rubber no-slip disk, hardness 70 Shore A, supplied assembled to the base.

FEATURES

The particular assembling system of the no-slip disk to the base assures a perfect anchoring, preventing separation even in case of impact during transport or of adhesion (sticking) to the floor (see No-slip disks on page 979).

ORDER INFORMATION

The levelling elements are supplied unassembled to make carriage and storage easier. The components (base and stem) are supplied in separate packing: less volume taken and better protection from scratches and dirt.

To order bases and stems separately, see:

- table of possible combinations Bases/Stems (see page 983)
- the codes of the Bases (see page 980)
- the codes of the Stems (see page 985).

ACCESSORIES ON REQUEST

AISI 304 stainless steel nut (see Nuts NT. on page 979).



ELESA Original design

12/2025

Models all rights reserved in accordance with the law. Always mention the source when reproducing our drawings and photos.

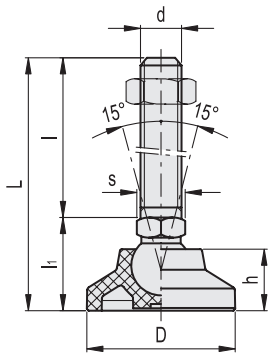

INOX STAINLESS STEEL INCH

LS.A-SST

Code	Description	D	d2A	L	l	l1	h	s	Articulation Ø	Max. limit static load* [lbf]	⚖
90351221	LS.A-25-14-SST-3/8-16x2	0.98	3/8-16	2.94	2	0.94	0.47	9/16	0.55	1573.66	0.10
90351231	LS.A-25-14-SST-3/8-16x4	0.98	3/8-16	4.94	4	0.94	0.47	9/16	0.55	1573.66	0.21
90351235	LS.A-25-14-SST-3/8-16x6	0.98	3/8-16	6.94	6	0.94	0.47	9/16	0.55	1573.66	0.13
90351321	LS.A-25-14-SST-1/2-13x2	0.98	1/2-13	2.94	2	0.94	0.47	9/16	0.55	1573.66	0.13
90351331	LS.A-25-14-SST-1/2-13x4	0.98	1/2-13	4.94	4	0.94	0.47	9/16	0.55	1573.66	0.21
90351335	LS.A-25-14-SST-1/2-13x6	0.98	1/2-13	6.94	6	0.94	0.47	9/16	0.55	1573.66	0.13
90351523	LS.A-25-14-SST-5/8-11x4	0.98	5/8-11	4.94	4	0.94	0.47	5/8	0.55	1573.66	0.27
90351541	LS.A-25-14-SST-5/8-11x6	0.98	5/8-11	6.94	6	0.94	0.47	5/8	0.55	1573.66	0.50
90351565	LS.A-25-14-SST-5/8-11x8	0.98	5/8-11	8.94	8	0.94	0.47	5/8	0.55	1573.66	0.56
90352221	LS.A-32-14-SST-3/8-16x2	1.26	3/8-16	2.94	2	0.98	0.59	9/16	0.55	2023.28	0.11
90352231	LS.A-32-14-SST-3/8-16x4	1.26	3/8-16	4.94	4	0.98	0.59	9/16	0.55	2023.28	0.22
90352235	LS.A-32-14-SST-3/8-16x6	1.26	3/8-16	6.94	6	0.98	0.59	9/16	0.55	2023.28	0.12
90352321	LS.A-32-14-SST-1/2-13x2	1.26	1/2-13	2.94	2	0.98	0.59	9/16	0.55	2023.28	0.13
90352331	LS.A-32-14-SST-1/2-13x4	1.26	1/2-13	4.94	4	0.98	0.59	9/16	0.55	2023.28	0.22
90352335	LS.A-32-14-SST-1/2-13x6	1.26	1/2-13	6.94	6	0.98	0.59	9/16	0.55	2023.28	0.22
90352523	LS.A-32-14-SST-5/8-11x4	1.26	5/8-11	4.94	4	0.98	0.59	5/8	0.55	2023.28	0.28
90352541	LS.A-32-14-SST-5/8-11x6	1.26	5/8-11	6.94	6	0.98	0.59	5/8	0.55	2023.28	0.51
90352565	LS.A-32-14-SST-5/8-11x8	1.26	5/8-11	8.94	8	0.98	0.59	5/8	0.55	2023.28	0.56
90353221	LS.A-40-14-SST-3/8-16x2	1.57	3/8-16	2.94	2	0.98	0.67	9/16	0.55	2922.52	0.12
90353231	LS.A-40-14-SST-3/8-16x4	1.57	3/8-16	4.94	4	0.98	0.67	9/16	0.55	2922.52	0.24
90353235	LS.A-40-14-SST-3/8-16x6	1.57	3/8-16	6.94	6	0.98	0.67	9/16	0.55	2922.52	0.13
90353321	LS.A-40-14-SST-1/2-13x2	1.57	1/2-13	2.94	2	0.98	0.67	9/16	0.55	2922.52	0.15
90353331	LS.A-40-14-SST-1/2-13x4	1.57	1/2-13	4.94	4	0.98	0.67	9/16	0.55	2922.52	0.24
90353335	LS.A-40-14-SST-1/2-13x6	1.57	1/2-13	6.94	6	0.98	0.67	9/16	0.55	2922.52	0.24
90353523	LS.A-40-14-SST-5/8-11x4	1.57	5/8-11	4.94	4	0.98	0.67	5/8	0.55	2922.52	0.29
90353541	LS.A-40-14-SST-5/8-11x6	1.57	5/8-11	6.94	6	0.98	0.67	5/8	0.55	2922.52	0.52
90353565	LS.A-40-14-SST-5/8-11x8	1.57	5/8-11	8.94	8	0.98	0.67	5/8	0.55	2922.52	0.58
90354221	LS.A-50-14-SST-3/8-16x2	1.97	3/8-16	2.94	2	1.06	0.75	9/16	0.55	2922.52	0.14
90354231	LS.A-50-14-SST-3/8-16x4	1.97	3/8-16	4.94	4	1.06	0.75	9/16	0.55	2922.52	0.25
90354235	LS.A-50-14-SST-3/8-16x6	1.97	3/8-16	6.94	6	1.06	0.75	9/16	0.55	2922.52	0.15
90354321	LS.A-50-14-SST-1/2-13x2	1.97	1/2-13	2.94	2	1.06	0.75	9/16	0.55	2922.52	0.15
90354331	LS.A-50-14-SST-1/2-13x4	1.97	1/2-13	4.94	4	1.06	0.75	9/16	0.55	2922.52	0.24
90354335	LS.A-50-14-SST-1/2-13x6	1.97	1/2-13	6.94	6	1.06	0.75	9/16	0.55	2922.52	0.25
90354523	LS.A-50-14-SST-5/8-11x4	1.97	5/8-11	4.94	4	1.06	0.75	5/8	0.55	2922.52	0.30
90354541	LS.A-50-14-SST-5/8-11x6	1.97	5/8-11	6.94	6	1.06	0.75	5/8	0.55	2922.52	0.53
90354565	LS.A-50-14-SST-5/8-11x8	1.97	5/8-11	8.94	8	1.06	0.75	5/8	0.55	2922.52	0.59
90355121	LS.A-60-14-SST-3/8-16X2	2.36	3/8-16	3.30	2	1.30	0.94	9/16	0.55	3147.33	0.17
90355125	LS.A-60-14-SST-3/8-16X4	2.36	3/8-16	5.30	4	1.30	0.94	9/16	0.55	3147.33	0.28
90355127	LS.A-60-14-SST-3/8-16X6	2.36	3/8-16	7.30	6	1.30	0.94	9/16	0.55	3147.33	0.18
90355321	LS.A-60-14-SST-1/2-13X2	2.36	1/2-13	3.30	2	1.30	0.94	9/16	0.55	3147.33	0.19
90355325	LS.A-60-14-SST-1/2-13X4	2.36	1/2-13	5.30	4	1.30	0.94	9/16	0.55	3147.33	0.29
90355331	LS.A-60-14-SST-1/2-13X6	2.36	1/2-13	7.30	6	1.30	0.94	9/16	0.55	3147.33	0.28
90355521	LS.A-60-14-SST-5/8-11X4	2.36	5/8-11	5.30	4	1.30	0.94	5/8	0.55	3147.33	0.40
90355525	LS.A-60-14-SST-5/8-11X6	2.36	5/8-11	7.30	6	1.30	0.94	5/8	0.55	3147.33	0.57
90355541	LS.A-60-14-SST-5/8-11X8	2.36	5/8-11	9.30	8	1.30	0.94	5/8	0.55	3147.33	0.62
90355621	LS.A-60-24-SST-5/8-11X4	2.36	5/8-11	5.30	4	1.69	0.94	15/16	0.94	4046.56	0.59
90355625	LS.A-60-24-SST-5/8-11X6	2.36	5/8-11	7.30	6	1.69	0.94	15/16	0.94	4046.56	0.71
90355721	LS.A-60-24-SST-5/8-11X8	2.36	5/8-11	9.30	8	1.69	0.94	15/16	0.94	4046.56	0.77
90355731	LS.A-60-24-SST-3/4-10X4	2.36	3/4-10	5.30	4	1.69	0.94	15/16	0.94	4046.56	0.76
90355821	LS.A-60-24-SST-3/4-10X6	2.36	3/4-10	7.30	6	1.69	0.94	15/16	0.94	4046.56	0.93
90355825	LS.A-60-24-SST-3/4-10X8	2.36	3/4-10	9.30	8	1.69	0.94	15/16	0.94	4046.56	1.21

* The max static load is the value above which the load applied to the element may cause some plastic material breakage, in particular conditions of use. Obviously, a factor that takes into consideration the importance and the safety level of the specific application must be applied to this value.

Models all rights reserved in accordance with the law. Always mention the source when reproducing our drawings and photos.

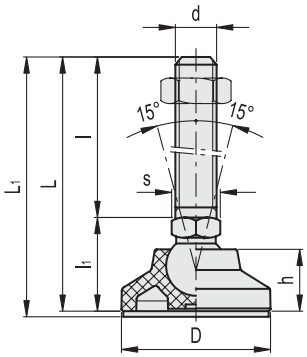

INOX STAINLESS STEEL INCH

LS.A-AS-SST

Code	Description	D	d2A	L	L1	l	l1	h	s	Articulation Ø	Max. limit static load* [lbf]	⚖
90356221	LS.A-25-14-AS-SST-3/8-16x2	0.98	3/8-16	2.94	3.06	2	0.94	0.47	9/16	0.55	1573.66	0.11
90356231	LS.A-25-14-AS-SST-3/8-16x4	0.98	3/8-16	4.94	5.06	4	0.94	0.47	9/16	0.55	1573.66	0.22
90356235	LS.A-25-14-AS-SST-3/8-16x6	0.98	3/8-16	6.94	7.06	6	0.94	0.47	9/16	0.55	1573.66	0.12
90356321	LS.A-25-14-AS-SST-1/2-13x2	0.98	1/2-13	2.94	3.06	2	0.94	0.47	9/16	0.55	1573.66	0.13
90356331	LS.A-25-14-AS-SST-1/2-13x4	0.98	1/2-13	4.94	5.06	4	0.94	0.47	9/16	0.55	1573.66	0.22
90356335	LS.A-25-14-AS-SST-1/2-13x6	0.98	1/2-13	6.94	7.06	6	0.94	0.47	9/16	0.55	1573.66	0.22
90356523	LS.A-25-14-AS-SST-5/8-11x4	0.98	5/8-11	4.94	5.06	4	0.94	0.47	5/8	0.55	1573.66	0.27
90356541	LS.A-25-14-AS-SST-5/8-11x6	0.98	5/8-11	6.94	7.06	6	0.94	0.47	5/8	0.55	1573.66	0.51
90356565	LS.A-25-14-AS-SST-5/8-11x8	0.98	5/8-11	8.94	9.06	8	0.94	0.47	5/8	0.55	1573.66	0.56
90357221	LS.A-32-14-AS-SST-3/8-16x2	1.26	3/8-16	2.94	3.06	2	0.98	0.59	9/16	0.55	2023.28	0.12
90357231	LS.A-32-14-AS-SST-3/8-16x4	1.26	3/8-16	4.94	5.06	4	0.98	0.59	9/16	0.55	2023.28	0.23
90357235	LS.A-32-14-AS-SST-3/8-16x6	1.26	3/8-16	6.94	7.06	6	0.98	0.59	9/16	0.55	2023.28	0.13
90357321	LS.A-32-14-AS-SST-1/2-13x2	1.26	1/2-13	2.94	3.06	2	0.98	0.59	9/16	0.55	2023.28	0.15
90357331	LS.A-32-14-AS-SST-1/2-13x4	1.26	1/2-13	4.94	5.06	4	0.98	0.59	9/16	0.55	2023.28	0.23
90357335	LS.A-32-14-AS-SST-1/2-13x6	1.26	1/2-13	6.94	7.06	6	0.98	0.59	9/16	0.55	2023.28	0.23
90357523	LS.A-32-14-AS-SST-5/8-11x4	1.26	5/8-11	4.94	5.06	4	0.98	0.59	5/8	0.55	2023.28	0.29
90357541	LS.A-32-14-AS-SST-5/8-11x6	1.26	5/8-11	6.94	7.06	6	0.98	0.59	5/8	0.55	2023.28	0.52
90357565	LS.A-32-14-AS-SST-5/8-11x8	1.26	5/8-11	8.94	9.06	8	0.98	0.59	5/8	0.55	2023.28	0.58
90358221	LS.A-40-14-AS-SST-3/8-16x2	1.57	3/8-16	2.94	3.06	2	0.98	0.67	9/16	0.55	2922.52	0.14
90358231	LS.A-40-14-AS-SST-3/8-16x4	1.57	3/8-16	4.94	5.06	4	0.98	0.67	9/16	0.55	2922.52	0.25
90358235	LS.A-40-14-AS-SST-3/8-16x6	1.57	3/8-16	6.94	7.06	6	0.98	0.67	9/16	0.55	2922.52	0.15
90358321	LS.A-40-14-AS-SST-1/2-13x2	1.57	1/2-13	2.94	3.06	2	0.98	0.67	9/16	0.55	2922.52	0.16
90358331	LS.A-40-14-AS-SST-1/2-13x4	1.57	1/2-13	4.94	5.06	4	0.98	0.67	9/16	0.55	2922.52	0.25
90358335	LS.A-40-14-AS-SST-1/2-13x6	1.57	1/2-13	6.94	7.06	6	0.98	0.67	9/16	0.55	2922.52	0.25
90358523	LS.A-40-14-AS-SST-5/8-11x4	1.57	5/8-11	4.94	5.06	4	0.98	0.67	5/8	0.55	2922.52	0.30
90358541	LS.A-40-14-AS-SST-5/8-11x6	1.57	5/8-11	6.94	7.06	6	0.98	0.67	5/8	0.55	2922.52	0.54
90358565	LS.A-40-14-AS-SST-5/8-11x8	1.57	5/8-11	8.94	9.06	8	0.98	0.67	5/8	0.55	2922.52	0.59
90359221	LS.A-50-14-AS-SST-3/8-16x2	1.97	3/8-16	2.94	3.06	2	1.06	0.75	9/16	0.55	2922.52	0.17
90359231	LS.A-50-14-AS-SST-3/8-16x4	1.97	3/8-16	4.94	5.06	4	1.06	0.75	9/16	0.55	2922.52	0.27
90359235	LS.A-50-14-AS-SST-3/8-16x6	1.97	3/8-16	6.94	7.06	6	1.06	0.75	9/16	0.55	2922.52	0.17
90359321	LS.A-50-14-AS-SST-1/2-13x2	1.97	1/2-13	2.94	3.06	2	1.06	0.75	9/16	0.55	2922.52	0.19
90359331	LS.A-50-14-AS-SST-1/2-13x4	1.97	1/2-13	4.94	5.06	4	1.06	0.75	9/16	0.55	2922.52	0.27
90359335	LS.A-50-14-AS-SST-1/2-13x6	1.97	1/2-13	6.94	7.06	6	1.06	0.75	9/16	0.55	2922.52	0.27
90359523	LS.A-50-14-AS-SST-5/8-11x4	1.97	5/8-11	4.94	5.06	4	1.06	0.75	5/8	0.55	2922.52	0.33
90359541	LS.A-50-14-AS-SST-5/8-11x6	1.97	5/8-11	6.94	7.06	6	1.06	0.75	5/8	0.55	2922.52	0.56
90359565	LS.A-50-14-AS-SST-5/8-11x8	1.97	5/8-11	8.94	9.06	8	1.06	0.75	5/8	0.55	2922.52	0.62
90359621	LS.A-60-14-AS-SST-3/8-16X2	2.36	3/8-16	3.30	3.42	2	1.30	0.94	9/16	0.55	3147.33	0.20
90359625	LS.A-60-14-AS-SST-3/8-16X4	2.36	3/8-16	5.30	5.42	4	1.30	0.94	9/16	0.55	3147.33	0.31
90359627	LS.A-60-14-AS-SST-3/8-16X6	2.36	3/8-16	7.30	7.42	6	1.30	0.94	9/16	0.55	3147.33	0.21
90359645	LS.A-60-14-AS-SST-1/2-13X2	2.36	1/2-13	3.30	3.42	2	1.30	0.94	9/16	0.55	3147.33	0.22
90359651	LS.A-60-14-AS-SST-1/2-13X4	2.36	1/2-13	5.30	5.42	4	1.30	0.94	9/16	0.55	3147.33	0.33
90359655	LS.A-60-14-AS-SST-1/2-13X6	2.36	1/2-13	7.30	7.42	6	1.30	0.94	9/16	0.55	3147.33	0.31
90359675	LS.A-60-14-AS-SST-5/8-11X4	2.36	5/8-11	5.30	5.42	4	1.30	0.94	5/8	0.55	3147.33	0.43
90359681	LS.A-60-14-AS-SST-5/8-11X6	2.36	5/8-11	7.30	7.42	6	1.30	0.94	5/8	0.55	3147.33	0.60
90359685	LS.A-60-14-AS-SST-5/8-11X8	2.36	5/8-11	9.30	9.42	8	1.30	0.94	5/8	0.55	3147.33	0.65
90359695	LS.A-60-24-AS-SST-5/8-11X4	2.36	5/8-11	5.30	5.42	4	1.69	0.94	15/16	0.94	4046.56	0.57
90359701	LS.A-60-24-AS-SST-5/8-11X6	2.36	5/8-11	7.30	7.42	6	1.69	0.94	15/16	0.94	4046.56	0.69
90359705	LS.A-60-24-AS-SST-5/8-11X8	2.36	5/8-11	9.30	9.42	8	1.69	0.94	15/16	0.94	4046.56	0.75
90359715	LS.A-60-24-AS-SST-3/4-10X4	2.36	3/4-10	5.30	5.42	4	1.69	0.94	15/16	0.94	4046.56	0.74
90359721	LS.A-60-24-AS-SST-3/4-10X6	2.36	3/4-10	7.30	7.42	6	1.69	0.94	15/16	0.94	4046.56	0.91
90359725	LS.A-60-24-AS-SST-3/4-10X8	2.36	3/4-10	9.30	9.42	8	1.69	0.94	15/16	0.94	4046.56	1.19

* The max static load is the value above which the load applied to the element may cause some plastic material breakage, in particular conditions of use. Obviously, a factor that takes into consideration the importance and the safety level of the specific application must be applied to this value.

Models all rights reserved in accordance with the law. Always mention the source when reproducing our drawings and photos.