Levelling feet

Technopolymer base, steel stem

INCH

RoHS PA NBR +212 °F -22 °F

BASE

Glass-fibre reinforced polyamide based (PA) technopolymer, black colour, matte finish.

ARTICULATED STEM

Threaded zinc-plated steel with regulation hexagon.

STANDARD EXECUTIONS

- **LS.A**: without no-slip disk.
- **LS.A-AS**: with NBR rubber no-slip disk, hardness 70 Shore A, supplied assembled to the base.

FEATURES

The particular assembling system of the no-slip disk to the base assures a perfect anchoring, preventing separation even in case of impact during transport or of adhesion (sticking) to the floor (see No-slip disks on page 979).

ORDER INFORMATION

The levelling elements are supplied unassembled to make carriage and storage easier. The components (base and stem) are supplied in separate packing: less volume taken and better protection from scratches and dirt.

To order bases and stems separately, see:

- table of possible combinations Bases/Stems (see page 983)
- the codes of the Bases (see page 980)
- the codes of the Stems (see page 985).

ACCESSORIES ON REQUEST

Zinc-plated steel nut (see Nuts NT. on page 979).



ELESA Original design

12/2025

Models all rights reserved in accordance with the law. Always mention the source when reproducing our drawings and photos.

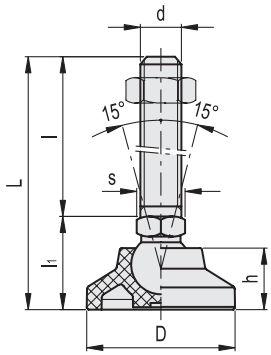

INCH

Code	Description	D	d2A	L	l	l1	h	s	Articulation Ø	Max. limit static load* [lbf]	⚖
90341221	LS.A-25-14-3/8-16x2	0.98	3/8-16	2.94	2	0.94	0.47	9/16	0.55	1573.66	0.10
90341231	LS.A-25-14-3/8-16x4	0.98	3/8-16	4.94	4	0.94	0.47	9/16	0.55	1573.66	0.15
90341235	LS.A-25-14-3/8-16x6	0.98	3/8-16	6.94	6	0.94	0.47	9/16	0.55	1573.66	0.16
90341321	LS.A-25-14-1/2-13x2	0.98	1/2-13	2.94	2	0.94	0.47	9/16	0.55	1573.66	0.14
90341331	LS.A-25-14-1/2-13x4	0.98	1/2-13	4.94	4	0.94	0.47	9/16	0.55	1573.66	0.22
90341335	LS.A-25-14-1/2-13x6	0.98	1/2-13	6.94	6	0.94	0.47	9/16	0.55	1573.66	0.21
90341523	LS.A-25-14-5/8-11x4	0.98	5/8-11	4.94	4	0.94	0.47	5/8	0.55	1573.66	0.33
90341541	LS.A-25-14-5/8-11x6	0.98	5/8-11	6.94	6	0.94	0.47	5/8	0.55	1573.66	0.48
90341565	LS.A-25-14-5/8-11x8	0.98	5/8-11	8.94	8	0.94	0.47	5/8	0.55	1573.66	0.54
90342221	LS.A-32-14-3/8-16x2	1.26	3/8-16	2.98	2	0.98	0.59	9/16	0.55	2023.28	0.11
90342231	LS.A-32-14-3/8-16x4	1.26	3/8-16	4.98	4	0.98	0.59	9/16	0.55	2023.28	0.16
90342235	LS.A-32-14-3/8-16x6	1.26	3/8-16	6.98	6	0.98	0.59	9/16	0.55	2023.28	0.17
90342321	LS.A-32-14-1/2-13x2	1.26	1/2-13	2.98	2	0.98	0.59	9/16	0.55	2023.28	0.15
90342331	LS.A-32-14-1/2-13x4	1.26	1/2-13	4.98	4	0.98	0.59	9/16	0.55	2023.28	0.21
90342335	LS.A-32-14-1/2-13x6	1.26	1/2-13	6.98	6	0.98	0.59	9/16	0.55	2023.28	0.22
90342523	LS.A-32-14-5/8-11x4	1.26	5/8-11	4.98	4	0.98	0.59	5/8	0.55	2023.28	0.34
90342541	LS.A-32-14-5/8-11x6	1.26	5/8-11	6.98	6	0.98	0.59	5/8	0.55	2023.28	0.49
90342565	LS.A-32-14-5/8-11x8	1.26	5/8-11	8.98	8	0.98	0.59	5/8	0.55	2023.28	0.55
90343221	LS.A-40-14-3/8-16x2	1.57	3/8-16	2.98	2	0.98	0.67	9/16	0.55	2922.52	0.12
90343231	LS.A-40-14-3/8-16x4	1.57	3/8-16	4.98	4	0.98	0.67	9/16	0.55	2922.52	0.17
90343235	LS.A-40-14-3/8-16x6	1.57	3/8-16	6.98	6	0.98	0.67	9/16	0.55	2922.52	0.19
90343321	LS.A-40-14-1/2-13x2	1.57	1/2-13	2.98	2	0.98	0.67	9/16	0.55	2922.52	0.14
90343331	LS.A-40-14-1/2-13x4	1.57	1/2-13	4.98	4	0.98	0.67	9/16	0.55	2922.52	0.24
90343335	LS.A-40-14-1/2-13x6	1.57	1/2-13	6.98	6	0.98	0.67	9/16	0.55	2922.52	0.23
90343523	LS.A-40-14-5/8-11x4	1.57	5/8-11	4.98	4	0.98	0.67	5/8	0.55	2922.52	0.35
90343541	LS.A-40-14-5/8-11x6	1.57	5/8-11	6.98	6	0.98	0.67	5/8	0.55	2922.52	0.50
90343565	LS.A-40-14-5/8-11x8	1.57	5/8-11	8.98	8	0.98	0.67	5/8	0.55	2922.52	0.56
90344221	LS.A-50-14-3/8-16x2	1.97	3/8-16	3.06	2	1.06	0.75	9/16	0.55	2922.52	0.14
90344231	LS.A-50-14-3/8-16x4	1.97	3/8-16	5.07	4	1.06	0.75	9/16	0.55	2922.52	0.18
90344235	LS.A-50-14-3/8-16x6	1.97	3/8-16	7.06	6	1.06	0.75	9/16	0.55	2922.52	0.20
90344321	LS.A-50-14-1/2-13x2	1.97	1/2-13	3.06	2	1.06	0.75	9/16	0.55	2922.52	0.17
90344331	LS.A-50-14-1/2-13x4	1.97	1/2-13	5.06	4	1.06	0.75	9/16	0.55	2922.52	0.26
90344335	LS.A-50-14-1/2-13x6	1.97	1/2-13	7.06	6	1.06	0.75	9/16	0.55	2922.52	0.24
90344523	LS.A-50-14-5/8-11x4	1.97	5/8-11	5.06	4	1.06	0.75	5/8	0.55	2922.52	0.36
90344541	LS.A-50-14-5/8-11x6	1.97	5/8-11	7.06	6	1.06	0.75	5/8	0.55	2922.52	0.52
90344565	LS.A-50-14-5/8-11x8	1.97	5/8-11	9.06	8	1.06	0.75	5/8	0.55	2922.52	0.57
90344611	LS.A-60-14-3/8-16X2	2.36	3/8-16	3.30	2	1.30	0.94	9/16	0.55	3147.33	0.17
90344615	LS.A-60-14-3/8-16X4	2.36	3/8-16	5.30	4	1.30	0.94	9/16	0.55	3147.33	0.21
90344617	LS.A-60-14-3/8-16X6	2.36	3/8-16	7.30	6	1.30	0.94	9/16	0.55	3147.33	0.23
90344721	LS.A-60-14-1/2-13X2	2.36	1/2-13	3.30	2	1.30	0.94	9/16	0.55	3147.33	0.20
90344725	LS.A-60-14-1/2-13X4	2.36	1/2-13	5.30	4	1.30	0.94	9/16	0.55	3147.33	0.29
90344731	LS.A-60-14-1/2-13X6	2.36	1/2-13	7.30	6	1.30	0.94	9/16	0.55	3147.33	0.27
90345225	LS.A-60-14-5/8-11X4	2.36	5/8-11	5.30	4	1.30	0.94	5/8	0.55	3147.33	0.39
90345231	LS.A-60-14-5/8-11X6	2.36	5/8-11	7.30	6	1.30	0.94	5/8	0.55	3147.33	0.55
90345235	LS.A-60-14-5/8-11X8	2.36	5/8-11	9.30	8	1.30	0.94	5/8	0.55	3147.33	0.60
90345245	LS.A-60-24-5/8-11X4	2.36	5/8-11	5.69	4	1.69	0.94	15/16	0.94	4046.56	0.51
90345251	LS.A-60-24-5/8-11X6	2.36	5/8-11	7.69	6	1.69	0.94	15/16	0.94	4046.56	0.70
90345255	LS.A-60-24-5/8-11X8	2.36	5/8-11	9.69	8	1.69	0.94	15/16	0.94	4046.56	0.83
90345265	LS.A-60-24-3/4-10X4	2.36	3/4-10	5.69	4	1.69	0.94	15/16	0.94	4046.56	0.70
90345271	LS.A-60-24-3/4-10X6	2.36	3/4-10	7.69	6	1.69	0.94	15/16	0.94	4046.56	0.90
90345275	LS.A-60-24-3/4-10X8	2.36	3/4-10	9.69	8	1.69	0.94	15/16	0.94	4046.56	1.10

* The max static load is the value above which the load applied to the element may cause some plastic material breakage, in particular conditions of use. Obviously, a factor that takes into consideration the importance and the safety level of the specific application must be applied to this value.

Models all rights reserved in accordance with the law. Always mention the source when reproducing our drawings and photos.

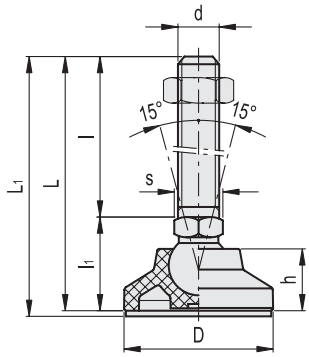

INCH

Code	Description	D	d2A	L	L1	l	l1	h	s	Articulation Ø	Max. limit static load* [lbf]	⚖
90346221	LS.A-25-14-AS-3/8-16x2	0.98	3/8-16	2.94	3.06	2	0.94	0.47	9/16	0.55	1573.66	0.11
90346231	LS.A-25-14-AS-3/8-16x4	0.98	3/8-16	4.94	5.06	4	0.94	0.47	9/16	0.55	1573.66	0.15
90346235	LS.A-25-14-AS-3/8-16x6	0.98	3/8-16	6.94	7.06	6	0.94	0.47	9/16	0.55	1573.66	0.17
90346321	LS.A-25-14-AS-1/2-13x2	0.98	1/2-13	2.94	3.06	2	0.94	0.47	9/16	0.55	1573.66	0.14
90346331	LS.A-25-14-AS-1/2-13x4	0.98	1/2-13	4.94	5.06	4	0.94	0.47	9/16	0.55	1573.66	0.23
90346335	LS.A-25-14-AS-1/2-13x6	0.98	1/2-13	6.94	7.06	6	0.94	0.47	9/16	0.55	1573.66	0.21
90346523	LS.A-25-14-AS-5/8-11x4	0.98	5/8-11	4.94	5.06	4	0.94	0.47	5/8	0.55	1573.66	0.34
90346541	LS.A-25-14-AS-5/8-11x6	0.98	5/8-11	6.94	7.06	6	0.94	0.47	5/8	0.55	1573.66	0.49
90346565	LS.A-25-14-AS-5/8-11x8	0.98	5/8-11	8.94	9.06	8	0.94	0.47	5/8	0.55	1573.66	0.54
90347221	LS.A-32-14-AS-3/8-16x2	1.26	3/8-16	2.98	3.10	2	0.98	0.59	9/16	0.55	2023.28	0.12
90347231	LS.A-32-14-AS-3/8-16x4	1.26	3/8-16	4.98	5.10	4	0.98	0.59	9/16	0.55	2023.28	0.18
90347235	LS.A-32-14-AS-3/8-16x6	1.26	3/8-16	6.98	7.10	6	0.98	0.59	9/16	0.55	2023.28	0.18
90347321	LS.A-32-14-AS-1/2-13x2	1.26	1/2-13	2.98	3.10	2	0.98	0.59	9/16	0.55	2023.28	0.16
90347331	LS.A-32-14-AS-1/2-13x4	1.26	1/2-13	4.98	5.10	4	0.98	0.59	9/16	0.55	2023.28	0.24
90347335	LS.A-32-14-AS-1/2-13x6	1.26	1/2-13	6.98	7.10	6	0.98	0.59	9/16	0.55	2023.28	0.22
90347523	LS.A-32-14-AS-5/8-11x4	1.26	5/8-11	4.98	5.10	4	0.98	0.59	5/8	0.55	2023.28	0.35
90347541	LS.A-32-14-AS-5/8-11x6	1.26	5/8-11	6.98	7.10	6	0.98	0.59	5/8	0.55	2023.28	0.50
90347565	LS.A-32-14-AS-5/8-11x8	1.26	5/8-11	8.98	9.10	8	0.98	0.59	5/8	0.55	2023.28	0.56
90348221	LS.A-40-14-AS-3/8-16x2	1.57	3/8-16	2.98	3.10	2	0.98	0.67	9/16	0.55	2922.52	0.14
90348231	LS.A-40-14-AS-3/8-16x4	1.57	3/8-16	4.98	5.10	4	0.98	0.67	9/16	0.55	2922.52	0.19
90348235	LS.A-40-14-AS-3/8-16x6	1.57	3/8-16	6.98	7.10	6	0.98	0.67	9/16	0.55	2922.52	0.20
90348321	LS.A-40-14-AS-1/2-13x2	1.57	1/2-13	2.98	3.10	2	0.98	0.67	9/16	0.55	2922.52	0.17
90348331	LS.A-40-14-AS-1/2-13x4	1.57	1/2-13	4.98	5.10	4	0.98	0.67	9/16	0.55	2922.52	0.26
90348335	LS.A-40-14-AS-1/2-13x6	1.57	1/2-13	6.98	7.10	6	0.98	0.67	9/16	0.55	2922.52	0.24
90348523	LS.A-40-14-AS-5/8-11x4	1.57	5/8-11	4.98	5.10	4	0.98	0.67	5/8	0.55	2922.52	0.37
90348541	LS.A-40-14-AS-5/8-11x6	1.57	5/8-11	6.98	7.10	6	0.98	0.67	5/8	0.55	2922.52	0.52
90348565	LS.A-40-14-AS-5/8-11x8	1.57	5/8-11	8.98	9.10	8	0.98	0.67	5/8	0.55	2922.52	0.57
90349221	LS.A-50-14-AS-3/8-16x2	1.97	3/8-16	3.06	3.18	2	1.06	0.75	9/16	0.55	2922.52	0.16
90349231	LS.A-50-14-AS-3/8-16x4	1.97	3/8-16	5.07	5.19	4	1.06	0.75	9/16	0.55	2922.52	0.21
90349235	LS.A-50-14-AS-3/8-16x6	1.97	3/8-16	7.06	7.18	6	1.06	0.75	9/16	0.55	2922.52	0.22
90349321	LS.A-50-14-AS-1/2-13x2	1.97	1/2-13	3.06	3.18	2	1.06	0.75	9/16	0.55	2922.52	0.20
90349331	LS.A-50-14-AS-1/2-13x4	1.97	1/2-13	5.06	5.18	4	1.06	0.75	9/16	0.55	2922.52	0.28
90349335	LS.A-50-14-AS-1/2-13x6	1.97	1/2-13	7.06	7.18	6	1.06	0.75	9/16	0.55	2922.52	0.26
90349523	LS.A-50-14-AS-5/8-11x4	1.97	5/8-11	5.06	5.18	4	1.06	0.75	5/8	0.55	2922.52	0.39
90349541	LS.A-50-14-AS-5/8-11x6	1.97	5/8-11	7.06	7.18	6	1.06	0.75	5/8	0.55	2922.52	0.54
90349565	LS.A-50-14-AS-5/8-11x8	1.97	5/8-11	9.06	9.18	8	1.06	0.75	5/8	0.55	2922.52	0.60
90349611	LS.A-60-14-AS-3/8-16X2	2.36	3/8-16	3.30	3.42	2	1.30	0.94	9/16	0.55	3147.33	0.20
90349615	LS.A-60-14-AS-3/8-16X4	2.36	3/8-16	5.30	5.42	4	1.30	0.94	9/16	0.55	3147.33	0.25
90349617	LS.A-60-14-AS-3/8-16X6	2.36	3/8-16	7.30	7.42	6	1.30	0.94	9/16	0.55	3147.33	0.26
90349721	LS.A-60-14-AS-1/2-13X2	2.36	1/2-13	3.30	3.42	2	1.30	0.94	9/16	0.55	3147.33	0.23
90349725	LS.A-60-14-AS-1/2-13X4	2.36	1/2-13	5.30	5.42	4	1.30	0.94	9/16	0.55	3147.33	0.32
90349731	LS.A-60-14-AS-1/2-13X6	2.36	1/2-13	7.30	7.42	6	1.30	0.94	9/16	0.55	3147.33	0.30
90350225	LS.A-60-14-AS-5/8-11X4	2.36	5/8-11	5.30	5.42	4	1.30	0.94	5/8	0.55	3147.33	0.43
90350231	LS.A-60-14-AS-5/8-11X6	2.36	5/8-11	7.30	7.42	6	1.30	0.94	5/8	0.55	3147.33	0.58
90350321	LS.A-60-14-AS-5/8-11X8	2.36	5/8-11	9.30	9.42	8	1.30	0.94	5/8	0.55	3147.33	0.63
90350331	LS.A-60-24-AS-5/8-11X4	2.36	5/8-11	5.69	5.81	4	1.69	0.94	15/16	0.94	4046.56	0.49
90350421	LS.A-60-24-AS-5/8-11X6	2.36	5/8-11	7.69	7.81	6	1.69	0.94	15/16	0.94	4046.56	0.68
90350431	LS.A-60-24-AS-5/8-11X8	2.36	5/8-11	9.69	9.81	8	1.69	0.94	15/16	0.94	4046.56	0.81
90350521	LS.A-60-24-AS-3/4-10X4	2.36	3/4-10	5.69	5.81	4	1.69	0.94	15/16	0.94	4046.56	0.67
90350525	LS.A-60-24-AS-3/4-10X6	2.36	3/4-10	7.69	7.81	6	1.69	0.94	15/16	0.94	4046.56	0.87
90350541	LS.A-60-24-AS-3/4-10X8	2.36	3/4-10	9.69	9.81	8	1.69	0.94	15/16	0.94	4046.56	1.07

* The max static load is the value above which the load applied to the element may cause some plastic material breakage, in particular conditions of use. Obviously, a factor that takes into consideration the importance and the safety level of the specific application must be applied to this value.

Models all rights reserved in accordance with the law. Always mention the source when reproducing our drawings and photos.