Tubular handles

Oval-cross-section, zinc alloy and aluminium

INCH

RoHS

HANDLE SHANKS

Die-cast zinc alloy, epoxy resin coating
- RAL 9005 black colour, matte finish. for SW and EL
- RAL 9006 silver colour, matte finish. for ES

Treaded blind holes.

END CAPS

Polyamide based (PA) technopolymer, light grey colour.

HANDLE TUBE

Aluminum
- Powder coated

Black RAL 9005, textured finish **SW**
- Anodized, natural color **EL**
- Anodized, natural color **ES**

FEATURES AND APPLICATIONS

GN 334 handles are characterised by a high stability thanks to the assembly of the handle shanks to the tube by means of two screws. These handles are typically used on turning or rolling doors for machines and equipment.



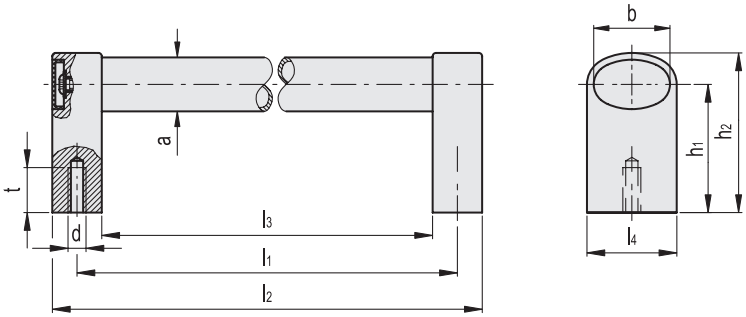

GN 334

INCH

Code	Description	d	l_1	l_2	b	a	h_1	h_2	l_3	l_4	t_{min}	⚖
GN.91486251	GN 334-1.42-8.00-SW	5/16 - 18	8.00	8.87	1.42	0.94	2.24	2.80	7.13	1.57	0.59	1.16
GN.91486751	GN 334-1.42-10.00-SW	5/16 - 18	10.00	10.87	1.42	0.94	2.24	2.80	9.13	1.57	0.59	1.26
GN.91487251	GN 334-1.42-12.00-SW	5/16 - 18	12.00	12.87	1.42	0.94	2.24	2.80	11.13	1.57	0.59	1.24
GN.91487751	GN 334-1.42-16.00-SW	5/16 - 18	16.00	16.87	1.42	0.94	2.24	2.80	15.13	1.57	0.59	1.54
GN.91488251	GN 334-1.42-20.00-SW	5/16 - 18	20.00	20.87	1.42	0.94	2.24	2.80	19.13	1.57	0.59	1.59
GN.91488751	GN 334-1.42-24.00-SW	5/16 - 18	24.00	24.87	1.42	0.94	2.24	2.80	23.13	1.57	0.59	1.76
GN.91486151	GN 334-1.42-8.00-EL	5/16 - 18	8.00	8.87	1.42	0.94	2.24	2.80	7.13	1.57	0.59	1.06
GN.91486651	GN 334-1.42-10.00-EL	5/16 - 18	10.00	10.87	1.42	0.94	2.24	2.80	9.13	1.57	0.59	1.15
GN.91487151	GN 334-1.42-12.00-EL	5/16 - 18	12.00	12.87	1.42	0.94	2.24	2.80	11.13	1.57	0.59	1.24
GN.91487651	GN 334-1.42-16.00-EL	5/16 - 18	16.00	16.87	1.42	0.94	2.24	2.80	15.13	1.57	0.59	1.42
GN.91488151	GN 334-1.42-20.00-EL	5/16 - 18	20.00	20.87	1.42	0.94	2.24	2.80	19.13	1.57	0.59	1.73
GN.91488651	GN 334-1.42-24.00-EL	5/16 - 18	24.00	24.87	1.42	0.94	2.24	2.80	23.13	1.57	0.59	2.01
GN.91486351	GN 334-1.42-8.00-ES	5/16 - 18	8.00	8.87	1.42	0.94	2.24	2.80	7.13	1.57	0.59	1.16
GN.91486851	GN 334-1.42-10.00-ES	5/16 - 18	10.00	10.87	1.42	0.94	2.24	2.80	9.13	1.57	0.59	1.26
GN.91487351	GN 334-1.42-12.00-ES	5/16 - 18	12.00	12.87	1.42	0.94	2.24	2.80	11.13	1.57	0.59	1.24
GN.91487851	GN 334-1.42-16.00-ES	5/16 - 18	16.00	16.87	1.42	0.94	2.24	2.80	15.13	1.57	0.59	1.54
GN.91488351	GN 334-1.42-20.00-ES	5/16 - 18	20.00	20.87	1.42	0.94	2.24	2.80	19.13	1.57	0.59	1.59
GN.91488851	GN 334-1.42-24.00-ES	5/16 - 18	24.00	24.87	1.42	0.94	2.24	2.80	23.13	1.57	0.59	1.76

Models all rights reserved in accordance with the law. Always mention the source when reproducing our drawings and photos.