METRIC | INOX STAINLESS STEEL | RoHS | PA | +130° -30°

MATERIAL
Glass-fibre reinforced polyamide based (PA) technopolymer, grey-black colour, matte finish.

BOSS CAP
Glass-fibre reinforced polyamide based (PA) technopolymer, matte finish, press-fit assembly. Supplied, removable by a screwdriver.

STANDARD EXECUTIONS
- **ELC**: black-oxide steel boss, H7 reamed hole, cap in the Ergostyle colours.
- **ELC-FC3**: black-oxide steel boss, H7 reamed hole, cap in RAL 7035 light grey colour, with arrow indicator.
- **ELC-SST**: AISI 303 stainless steel boss, H7 reamed hole, cap in the Ergostyle colours.
- **ELC-SST-FC3**: AISI 303 stainless steel boss, H7 reamed hole, cap in RAL 7035 light grey colour, with arrow indicator.

ERGONOMY
Rotations are performed smoothly and powerfully thanks to the heavy-duty arm of the lever, while the enlarged and sunken semispherical end offers an effective grip.

MANOEUVRE ANGLE LIMITATION
A limited manoeuvre angle is possible by fitting stop pins in the rear guide slot.

ACCESSORIES ON REQUEST
- GN 184: axial retaining washer in black-oxide steel (see page 897).
- GN 184.5: axial retaining washer in AISI 303 stainless steel (see page 897).
- MS.: ball and spring for clicking operation to be fitted into the two holes d3 drilled at 180°. (see page).
- ECB.T: glass-fibre reinforced polyamide based (PA) technopolymer boss cap, in Elecolors colours, matte finish, press-fit assembly (see table).
- ECBF.T: glass-fibre reinforced polyamide based (PA) technopolymer boss cap, RAL 7035 light grey colour, with arrow indicator, press-fit assembly (see table).

SPECIAL EXECUTIONS ON REQUEST
Levers with cross holes according to EN 110 (see page A-16).



ERGOSTYLE® ELESA Original design

Assembly example

by means of ball and spring for clicking operation

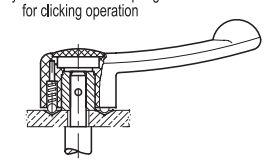

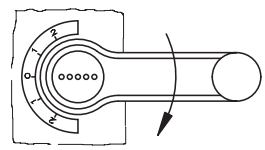

C1 RAL7021 | C2 RAL2004 | C3 RAL7035 | C4 RAL1021 | C5 RAL5024 | C6 RAL3000 | C17 RAL6017

ECB.T

Code	Description	Boss cap for
29551-*	ECB.T1-*	ELC.67
29552-*	ECB.T2-*	ELC.85
29553-*	ECB.T3-*	ELC.110
29554-*	ECB.T4-*	ELC.140

** Complete with colour index (C1, ..., C17).*

ECBF.T

Code	Description	Boss cap for
29551-FC3	ECBF.T1-C3	ELC.67-FC3
29552-FC3	ECBF.T2-C3	ELC.85-FC3
29553-FC3	ECBF.T3-C3	ELC.110-FC3
29554-FC3	ECBF.T4-C3	ELC.140-FC3

Models all rights reserved in accordance with the law. Always mention the source when reproducing our drawings and photos.

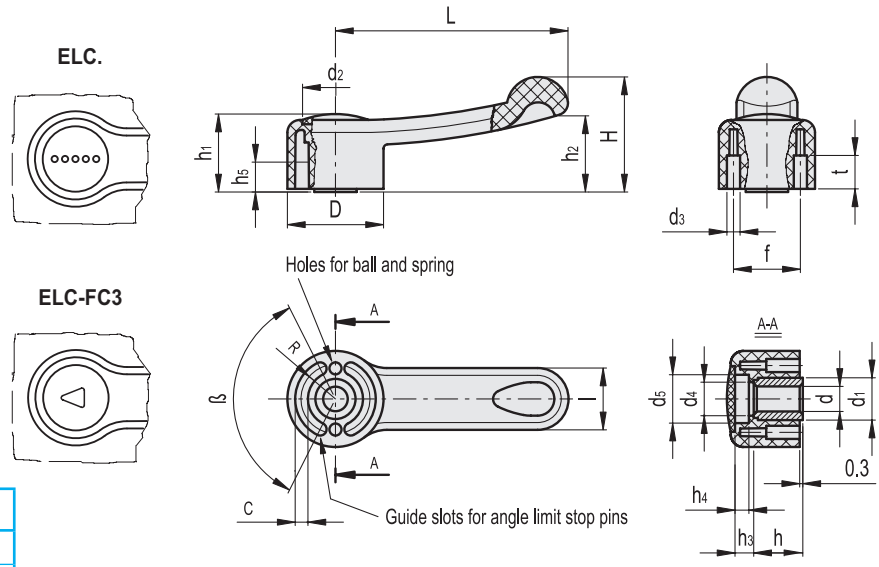

Conversion Table *1 mm = 0.039 inch*	
D	
mm	inch
32	1.26
37	1.46
46	1.81
54	2.13



*Complete with colour index, example: 212121-C2 ELC.67 A-6-C2

C1	C2	C3	C4	C5	C6	C17
RAL7021	RAL2004	RAL7035	RAL1021	RAL5024	RAL3000	RAL6017

ELC. METRIC

Code	Description	D	dH7	L	H	h	h1	h2	h3	h4	h5	d1	d2	d3*	d4	d5	l	R	t	c	β	f	⚖
212121-*	ELC.67 A-6-*	32	6	67	35	16	24	24	5	3	10	15	22.5	4	10	16	20	12	9	4	125±1°	24	50
212131-*	ELC.85 A-8-*	37	8	85	41	17.5	27	27	7.5	5	10	18	26	5	13.5	20	23	13.8	12.5	4.3	125±1°	26	63
212141-*	ELC.110 A-12-*	46	12	110	54	22	35	36	10	8	10	22	31.5	6	17	25.5	29	17.5	15.5	6.5	125±1°	32	129
212151-*	ELC.140 A-14-*	54	14	140	60	27	38	38	8.5	6	10	26	36	8	21	31	34	20.2	16	7	125±1°	39	145

ELC-FC3 METRIC

Code	Description	D	dH7	L	H	h	h1	h2	h3	h4	h5	d1	d2	d3*	d4	d5	l	R	t	c	β	f	⚖
212121-FC3	ELC.67 A-6-FC3	32	6	67	35	16	24	24	5	3	10	15	22.5	4	10	16	20	12	9	4	125±1°	24	50
212131-FC3	ELC.85 A-8-FC3	37	8	85	41	17.5	27	27	7.5	5	10	18	26	5	13.5	20	23	13.8	12.5	4.3	125±1°	26	63
212141-FC3	ELC.110 A-12-FC3	46	12	110	54	22	35	36	10	8	10	22	31.5	6	17	25.5	29	17.5	15.5	6.5	125±1°	32	129
212151-FC3	ELC.140 A-14-FC3	54	14	140	60	27	38	38	8.5	6	10	26	36	8	21	31	34	20.2	16	7	125±1°	39	145

ELC-SST INOX STAINLESS STEEL METRIC

Code	Description	D	dH7	L	H	h	h1	h2	h3	h4	h5	d1	d2	d3*	d4	d5	l	R	t	c	β	f	⚖
212161-*	ELC.67-SST-6-*	32	6	67	35	16	24	24	5	3	10	15	22.5	4	10	16	20	12	9	4	125±1°	24	50
212171-*	ELC.85-SST-8-*	37	8	85	41	17.5	27	27	7.5	5	10	18	26	5	13.5	20	23	13.8	12.5	4.3	125±1°	26	63
212181-*	ELC.110-SST-12-*	46	12	110	54	22	35	36	10	8	10	22	31.5	6	17	25.5	29	17.5	15.5	6.5	125±1°	32	129
212191-*	ELC.140-SST-14-*	54	14	140	60	27	38	38	8.5	6	10	26	36	8	21	31	34	20.2	16	7	125±1°	39	145

ELC-SST-FC3 INOX STAINLESS STEEL METRIC

Code	Description	D	dH7	L	H	h	h1	h2	h3	h4	h5	d1	d2	d3*	d4	d5	l	R	t	c	β	f	⚖
212161-FC3	ELC.67-SST-6-FC3	32	6	67	35	16	24	24	5	3	10	15	22.5	4	10	16	20	12	9	4	125±1°	24	50
212171-FC3	ELC.85-SST-8-FC3	37	8	85	41	17.5	27	27	7.5	5	10	18	26	5	13.5	20	23	13.8	12.5	4.3	125±1°	26	63
212181-FC3	ELC.110-SST-12-FC3	46	12	110	54	22	35	36	10	8	10	22	31.5	6	17	25.5	29	17.5	15.5	6.5	125±1°	32	129
212191-FC3	ELC.140-SST-14-FC3	54	14	140	60	27	38	38	8.5	6	10	26	36	8	21	31	34	20.2	16	7	125±1°	39	145

* Ball diameter

Models all rights reserved in accordance with the law. Always mention the source when reproducing our drawings and photos.

elesa