EBR-SWB

Handle with bistable electrical switch

Self-extinguishing technopolymer

RoHS | IP65 | PA | +80° -20°

METRIC

MATERIAL
Glass-fibre reinforced polyamide based (PA) technopolymer certified self-extinguishing UL-94 V0, black colour.

BISTABLE ELECTRICAL SWITCH WITH BUTTON
The device is made up of a normally open contact (NO).
Switching takes place by pressing the purple button (bistable contact), and remains switched until pressed again.
Contact resistance: max. 0.050 Ω
Isolation resistance: min. 1 GΩ at 500 VDC

LED
A red Led and a green Led can be configured through external logic to indicate the switch status.
Voltage range 24 Vdc ± 15%

SCREW-COVERS
Technopolymer, grey-black colour, matte finish. Supplied assembled, removable by a screwdriver.

IP PROTECTION
IP 65 protection class, according to EN 60529 (see page A-19).

STANDARD EXECUTIONS
Pass-through holes for cylindrical-head screws with hexagon socket.
- **EBR-SWB-B-C**: zinc-plated connector with 8 poles, back output.
- **EBR-SWB-L-C**: zinc-plated steel connector with 8 poles, left side output.
- **EBR-SWB-R-C**: zinc-plated connector with 8 poles, right side output.

8 pole cable UL: AWG22 RAL9005 PVC UL AWM Style 1569/2517.
- **EBR-SWB-B-F2.5**: 8 pole cable, length 2.5 metres, back output.
- **EBR-SWB-B-F5**: 8 pole cable, length 5 metres, back output.
- **EBR-SWB-L-F2.5**: 8 pole cable, length 2.5 metres, left side output.
- **EBR-SWB-L-F5**: 8 pole cable, length 5 metres, left side output.
- **EBR-SWB-R-F2.5**: 8 pole cable, length 2.5 metres, right side output.
- **EBR-SWB-R-F5**: 8 pole cable, length 5 metres, right side output.

FEATURES AND APPLICATIONS
This handle is used when it is necessary for the switching to be prolonged over time.
Through external logic, the Leds can be configured to indicate the specific status of the button. Example: button in neutral position green Led on, button switched on red Led off.
The mechanical life of the button is 200000 cycles.
The product has been manufactured in compliance with the EN60947-1:2007: +A1:2021+A2:2014 EN 60947-5-1:2017 standards and the CE marking is visible on one side of the handle.
In case of use of an extension with angled connector, the direction of the cable output is shown in the Fig.1.
EBR-SWB handle can be assembled with EBR neutral handle.

TECHNICAL DATA
Tensile stress and impact strength: F1, F2, L1 and L2 values reported in the table are the result of breaking tests carried out with the appropriate dynamometric equipment under the test conditions shown in the figure with ambient temperature.

ACCESSORIES ON REQUEST
FC-M12x1 (see page 976): extensions with 8 pole M12 female axial connector.

OTHER STANDARD EXECUTIONS
- EBR. (see page .): single complementary handle without switch.
- EBR-SWM (see page 1215): handle with monostable electrical switch.

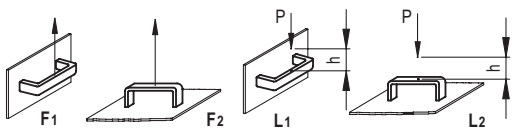

L [J] = P [N] • h [m]

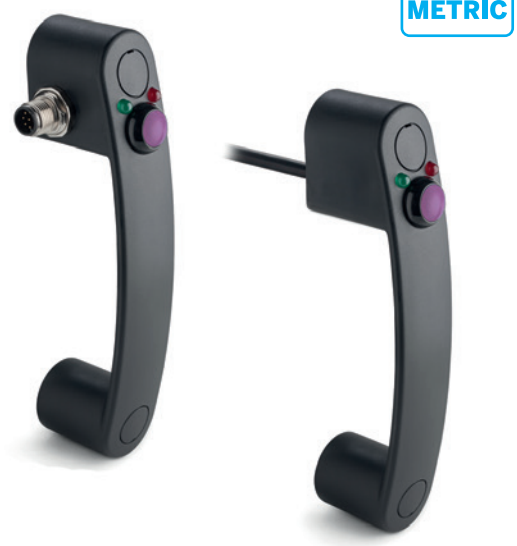

ERGOSTYLE® ELESA Original design

Fig.1

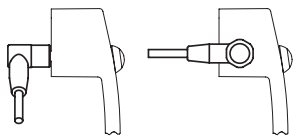

CE

In compliance with:
EN 60947-1:2007 + A1:2011 + A2:2014
EN 60947-5-1 : 2017

CONTACT WIRING CABLE

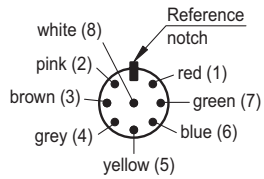

PUSH BUTTON

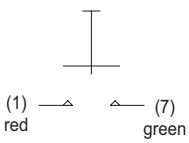

LEDS

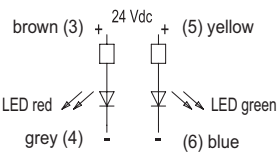

Electrical Features			
Load	Voltage	Current	Max Cycles
Resistive	12 Vdc	4 A	200000
Resistive	48 Vdc	1 A	200000
Resistive	48 Vdc	2 A	100000
Resistive	48 Vdc	3 A	75000
Logic level	5 Vdc	10 mA	200000
DWV	1000 Vrms	-	-
Short circuit conditioned current: 1000 A			

*For the connector version the maximum allowed voltage is 24 V and the maximum allowed current is 2A.

elesa 6/2025

Models all rights reserved in accordance with the law. Always mention the source when reproducing our drawings and photos.

Conversion Table	
1 mm = 0.039 inch	
L	
mm	inch
160	6.24

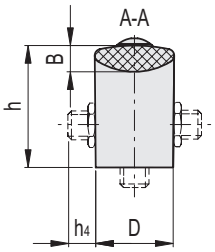

EBR-SWB-C

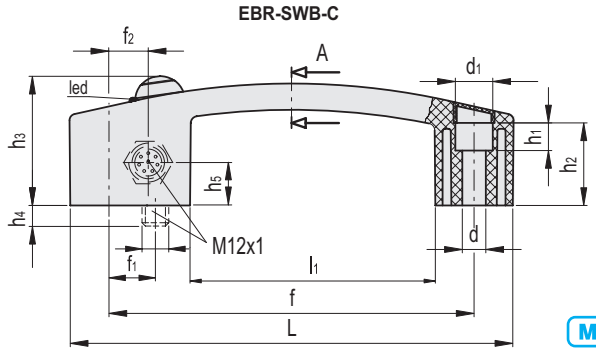

EBR-SWB-B-C

METRIC

Code	Description	L	f	d	d1	f1	D	h	h1	h2	h3	h4	B	l1	F1 [N]	F2 [N]	L1 [J]	L2 [J]	⚖
260571-C1	EBR.150-SWB-B-C	160	132±0.5	8.5	13.5	16	28	44	10	30	47	11	8.5	89	2800	2900	35	8	108

EBR-SWB-L-C

Code	Description	L	f	d	d1	f2	D	h	h1	h2	h3	h4	h5	B	l1	F1 [N]	F2 [N]	L1 [J]	L2 [J]	⚖
260581-C1	EBR.150-SWB-L-C	160	132±0.5	8.5	13.5	14.5	28	44	10	30	47	16	14	8.5	89	2800	2900	35	8	109

EBR-SWB-R-C

Code	Description	L	f	d	d1	f2	D	h	h1	h2	h3	h4	h5	B	l1	F1 [N]	F2 [N]	L1 [J]	L2 [J]	⚖
260591-C1	EBR.150-SWB-R-C	160	132±0.5	8.5	13.5	14.5	28	44	10	30	47	16	14	8.5	89	2800	2900	35	8	116

EBR-SWB-F

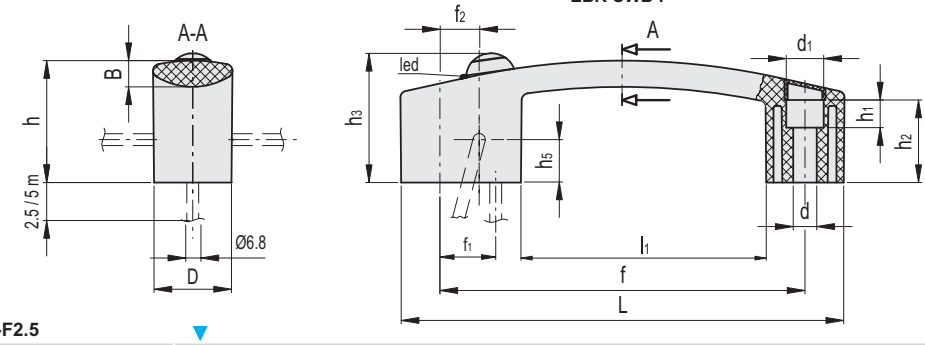

EBR-SWB-B-F2.5

METRIC

Code	Description	L	f	d	d1	f1	D	h	h1	h2	h3	B	l1	F1 [N]	F2 [N]	L1 [J]	L2 [J]	⚖
260576-C1	EBR.150-SWB-B-F2,5	160	132±0.5	8.5	13.5	16	28	44	10	30	47	8.5	89	2800	2900	35	8	230

EBR-SWB-B-F5

Code	Description	L	f	d	d1	f1	D	h	h1	h2	h3	B	l1	F1 [N]	F2 [N]	L1 [J]	L2 [J]	⚖
260572-C1	EBR.150-SWB-B-F5	160	132±0.5	8.5	13.5	16	28	44	10	30	47	8.5	89	2800	2900	35	8	447

EBR-SWB-L-F2.5

Code	Description	L	f	d	d1	f2	D	h	h1	h2	h3	h5	B	l1	F1 [N]	F2 [N]	L1 [J]	L2 [J]	⚖
260586-C1	EBR.150-SWB-L-F2,5	160	132±0.5	8.5	13.5	14.5	28	44	10	30	47	14	8.5	89	2800	2900	35	8	281

EBR-SWB-L-F5

Code	Description	L	f	d	d1	f2	D	h	h1	h2	h3	h5	B	l1	F1 [N]	F2 [N]	L1 [J]	L2 [J]	⚖
260582-C1	EBR.150-SWB-L-F5	160	132±0.5	8.5	13.5	14.5	28	44	10	30	47	14	8.5	89	2800	2900	35	8	446

EBR-SWB-R-F2.5

Code	Description	L	f	d	d1	f2	D	h	h1	h2	h3	h5	B	l1	F1 [N]	F2 [N]	L1 [J]	L2 [J]	⚖
260596-C1	EBR.150-SWB-R-F2,5	160	132±0.5	8.5	13.5	14.5	28	44	10	30	47	14	8.5	89	2800	2900	35	8	231

EBR-SWB-R-F5

Code	Description	L	f	d	d1	f2	D	h	h1	h2	h3	h5	B	l1	F1 [N]	F2 [N]	L1 [J]	L2 [J]	⚖
260592-C1	EBR.150-SWB-R-F5	160	132±0.5	8.5	13.5	14.5	28	44	10	30	47	14	8.5	89	2800	2900	35	8	356

Models all rights reserved in accordance with the law. Always mention the source when reproducing our drawings and photos.