Retaining cables

Polyethylene and stainless steel

INOX STAINLESS STEEL · RoHS · HMWPE · +60° -30°

CABLE

High-modulus polyethylene (HMWPE), black.

STANDARD EXECUTIONS

AISI 304 stainless steel fixing plate.
NERINOX treated stainless steel ring with two coils.

- **CV-T-2A**: cable with two clamping rings.
- **CV-T-A-P**: cable with one ring and one clamping plate.
- **CV-T-2P**: cable with two clamping plates.
- **CV-T**: cable without rings and without plates.
- **CV-T-P**: cable without rings and with one plates.

FEATURES AND APPLICATIONS

CV-T cables are light yet remarkably tough.
They are mainly used in combination with the different types of self-locking pins or in cases where you want to make small components or tools unmissable so that they are always available and at hand.
In particular, they can be used in place of the CT-S ball chain, when a particular tear resistance is required.



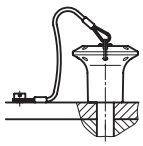

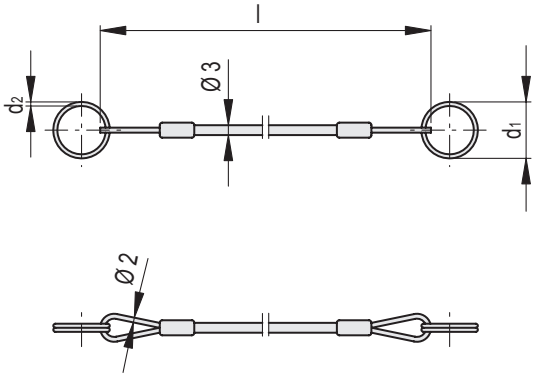

CV-T-2A

INOX STAINLESS STEEL

Code	Description	d_1	d_2	l	Max. static load [N]	⚖
76199	CV-T-2A-14-150	14	1	150	140	4
76201	CV-T-2A-18-150	18	1.3	150	160	6
76202	CV-T-2A-24-150	24	1.5	150	160	8
76203	CV-T-2A-30-150	30	1.8	150	180	11
76204	CV-T-2A-14-200	14	1	200	140	4.5
76206	CV-T-2A-18-200	18	1.3	200	160	7
76207	CV-T-2A-24-200	24	1.5	200	160	9
76208	CV-T-2A-30-200	30	1.8	200	180	11
76209	CV-T-2A-14-320	14	1	320	140	5
76211	CV-T-2A-18-320	18	1.3	320	160	8
76212	CV-T-2A-24-320	24	1.5	320	160	9
76213	CV-T-2A-30-320	30	1.8	320	180	12
76214	CV-T-2A-14-500	14	1	500	140	6
76216	CV-T-2A-18-500	18	1.3	500	160	8
76217	CV-T-2A-24-500	24	1.5	500	160	10
76218	CV-T-2A-30-500	30	1.8	500	180	13

elesa 10/2026

Models all rights reserved in accordance with the law. Always mention the source when reproducing our drawings and photos.

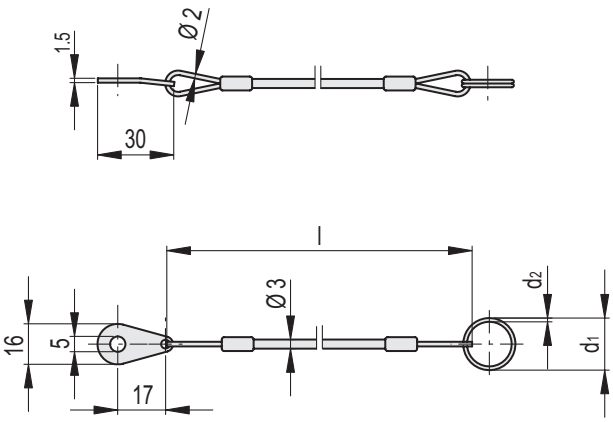

CV-T-A-P

INOX STAINLESS STEEL

Code	Description	d_1	d_2	l	Max. static load [N]	⚖
76219	CV-T-A-P-14-150	14	1	150	140	5
76221	CV-T-A-P-18-150	18	1.3	150	160	9
76222	CV-T-A-P-24-150	24	1.5	150	160	9
76223	CV-T-A-P-30-150	30	1.8	150	180	11
76224	CV-T-A-P-14-200	14	1	200	140	5.5
76226	CV-T-A-P-18-200	18	1.3	200	160	9
76227	CV-T-A-P-24-200	24	1.5	200	160	10
76228	CV-T-A-P-30-200	30	1.8	200	180	11
76229	CV-T-A-P-14-320	14	1	320	140	6
76231	CV-T-A-P-18-320	18	1.3	320	160	9
76232	CV-T-A-P-24-320	24	1.5	320	160	10
76233	CV-T-A-P-30-320	30	1.8	320	180	12
76234	CV-T-A-P-14-500	14	1	500	140	7
76236	CV-T-A-P-18-500	18	1.3	500	160	10
76237	CV-T-A-P-24-500	24	1.5	500	160	11
76238	CV-T-A-P-30-500	30	1.8	500	180	12

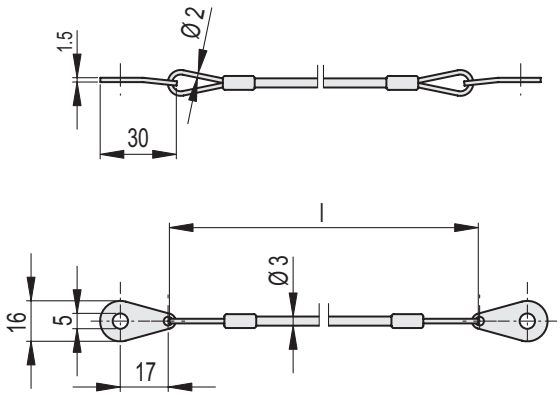

CV-T-2P

INOX STAINLESS STEEL

Code	Description	l	Max. static load [N]	⚖
76241	CV-T-2P-150	150	160	10
76246	CV-T-2P-200	200	160	11
76251	CV-T-2P-320	320	160	11
76256	CV-T-2P-500	500	160	12

Models all rights reserved in accordance with the law. Always mention the source when reproducing our drawings and photos.

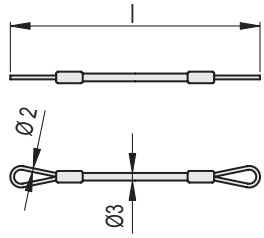

CV-T

Code	Description	l	Max. static load [N]	⚖
76915	CV-T-150	150	300	5
76920	CV-T-200	200	300	5
76932	CV-T-320	320	300	6
76950	CV-T-500	500	300	6

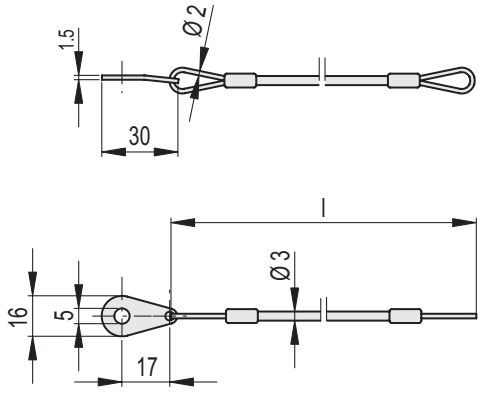

CV-T-P

INOX STAINLESS STEEL

Code	Description	l	Max. static load [N]	⚖
76261	CV-T-P-150	150	160	8
76266	CV-T-P-200	200	160	8
76271	CV-T-P-320	320	150	8
76276	CV-T-P-500	500	150	9

Models all rights reserved in accordance with the law. Always mention the source when reproducing our drawings and photos.