BAS3

Conveyor bipod support base

three arms, Technopolymer

METRIC | INOX STAINLESS STEEL | RoHS | PA | +100° -30°

MATERIAL

Glass-fibre reinforced polyamide based (PA) technopolymer, black colour, matte finish.

STANDARD EXECUTIONS

- **BAS3-A**: zinc-plated steel M10 screws, nuts and washers.
- **BAS3-SST**: AISI 304 stainless steel M10 screws, nuts and washers.

ASSEMBLY ON LEVELLING ELEMENTS

The three bearings of the base are supplied with brass bosses, threaded pass-through hole for the assembly of the stem of the levelling element series LS.A (see page 798), LV.A (see page 804), LV.F (see page 818).

FEATURES

The rounded shapes with a modern and elegant aesthetic guarantee maximum cleanability in the event of liquids or dust falling from above. Maximum tightening torque for screw assembly 35 Nm.



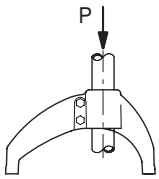

Retention force
P = 2000 N

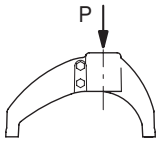

Max. static load
P = 9800 N

Values obtained with tightening torque 35 Nm

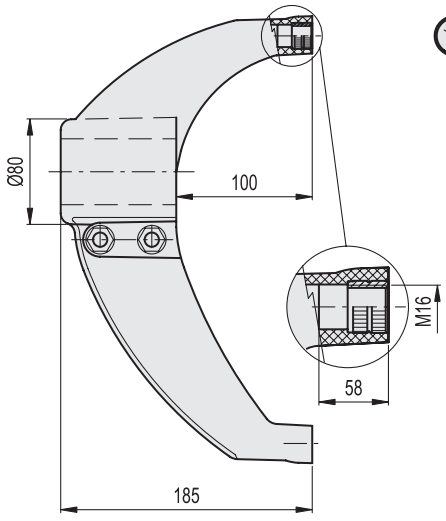

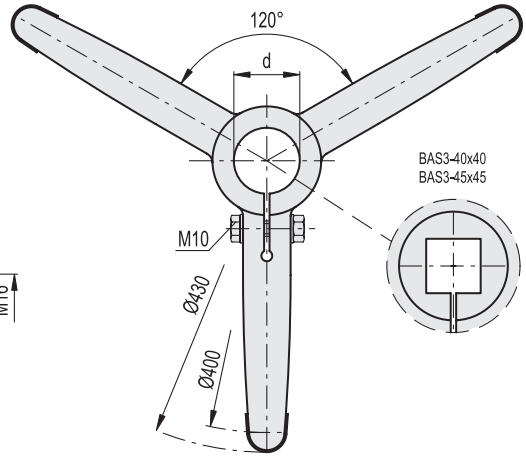

Conversion Table
1 mm = 0.039 inch

d	
mm	inch
42.4	1.67
45	1.77
48.3	1.90
50.8	2.00
60.3	2.37

METRIC | INOX STAINLESS STEEL

BAS3

Code	Description	d Tube (mm)	d Tube (GAS)	d Tube (inch)	⚖
419592	BAS3-42-A	42.4	1"1/4	-	800
419590	BAS3-48-A	48.3	1"1/2	-	790
419594	BAS3-50-A	50.8	-	2"	800
419588	BAS3-60-A	60.3	2"	-	770
419750	BAS3-40x40-A	40	-	-	800
419752	BAS3-45x45-A	45	-	-	795

BAS3-SST

Code	Description	⚖
419593	BAS3-42-SST	800
419591	BAS3-48-SST	790
419595	BAS3-50-SST	800
419589	BAS3-60-SST	770
419751	BAS3-40x40-SST	800
419753	BAS3-45x45-SST	795

elesa 9/2025

Models all rights reserved in accordance with the law. Always mention the source when reproducing our drawings and photos.