MATERIAL

- **Handle body**: glass-fibre reinforced polyamide based (PA) technopolymer certified self-extinguishing UL-94 V0, black colour, matte finish.
- **LED light diffuser cover**: UL-94 V0 self-extinguishing polycarbonate, opal colour. Included in the supply, for press-fitting, removable with screwdriver.
- **Button**: polyamide-based (PA) technopolymer, black colour.

MICROSWITCH WITH BUTTON

The device consists of a changeover contact comprising a normally open (NO) contact and a normally closed (NC) contact, or a normally open (NO) contact. Switching takes place by pressing the black button (monostable contact).

LED STRIP

RGB type, supply voltage 24Vdc ±10% (max. current consumption = 120 mA). Colour tones may vary slightly depending on the power supply voltage.

STANDARD EXECUTIONS

Pass-through holes for front or rear mounting via cylindrical-head screws with hexagon socket, hexagonal-head screws or nuts, which can be purchased.

8-pin cable: UL Style 2587 8xAWG22 PVC RAL9005, rear exit.

- **EMP-SWM-1NO+1NC-LD-F2.5**: 1 NC contact + 1 NO contact, cable length 2.5 m.
- **EMP-SWM-1NO+1NC-LD-F5**: 1 NC contact + 1 NO contact, cable length 5 m .

6-pin cable: UL Style 2587 6xAWG22 PVC RAL9005, rear exit

- **EMP-SWM-1NO-LD-F2.5:** 1 NO contact, cable length 2.5 m.
- **EMP-SWM-1NO-LD-F5:** 1 NO contact, cable length 5 m.

FEATURES AND APPLICATIONS

The EMP-SWM-LD handle (Elesa patent) integrates the functions of a handle, an electrical switch, and a signal light column into a single product. These handles are typically assembled on machine doors or protections. By pressing the button, the operator can use external logic to request access, for example, to the protected zone, or to restart the machinery following an interruption.

With the appropriate electrical connection, the LED strip colour can be configured to indicate the status of the guard (IEC 60204-1).

Protection rating IP40.

Example:

- red: requires immediate action to manage a dangerous situation.
- green: normal operating condition.
- yellow: wait, machinery shutting down or in a transitional state.
- blue: operation requested by the operator.

TECHNICAL DATA

Tensile stress and impact strength: the values F1, F2, L1 and L2 indicated in the table were obtained during breaking tests carried out under the test conditions shown in the figure with ambient temperature.

EU DECLARATION OF CONFORMITY

The object of the declaration described above is in conformity with the relevant European Union harmonisation legislation:

- **2014/35/EU** Low Voltage Directive
- **2014/30/EU (EMC)** Electromagnetic Compatibility Directive
- **2011/65/EU (RoHS)** Restriction of the use of certain hazardous substances in electrical and electronic equipment

Harmonised standards and references to other technical specifications used in relation to which conformity is declared: **EN 60947-5-1:2017**

ASSEMBLY INSTRUCTIONS

After having fixed the handle, insert the guides into the special grooves in the handle, applying enough pressure until fitting is complete. Apply final pressure to ensure the cover is fully secured. Finally, insert and tighten the supplied self-tapping screw into the designated side mounting point.



ERGOSTYLE® ELESA Original design



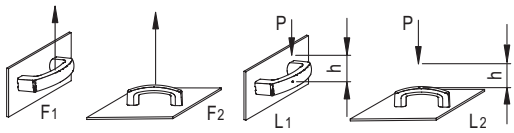

L [J] = P [N] • h [m]

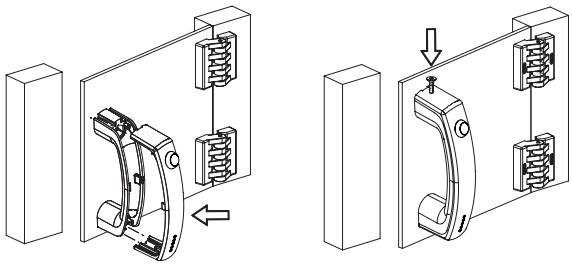

11/2026

Models all rights reserved in accordance with the law. Always mention the source when reproducing our drawings and photos.

SPECIAL EXECUTIONS ON REQUEST

- Button in various colours.
- Various cable lengths.

LED STRIP WIRING INSTRUCTIONS

When wired correctly, it is possible to obtain one of the 7 colours of the LED strip. The common contact corresponding to the white conductor must always be connected to the negative pole of the power supply. The other three conductors can be connected to the positive pole to respectively obtain the red, green, or blue colour of the LED strip, or connected simultaneously to obtain the remaining colours, as indicated in the table on the side. Other colours are possible by controlling the brightness of the individual channels with the PWM technique.

OTHER STANDARD EXECUTIONS

- EMPC.: single complementary handle without switch.
- EMP-LD: handles with LED indicator light.
- EMPC-SWM: handles with a double-contact monostable switch.

NO NC Electrical Features			
Load	Voltage	Current	Max Cycles
Resistive	28 Vdc	4 A	25000
Resistive	115 Vac, 60 Hz	1 A	25000
Inductive	28 Vdc	2 A	25000
DWV	1050 Vrms	-	-
Logic level	5 Vdc	10 mA	1 x 10^6

NO Electrical Features			
Load	Voltage	Current	Max Cycles
Resistive	28 Vdc	5 A	25000
Resistive	115 Vac, 60 Hz	3 A	25000
Inductive	28 Vdc	2 A	25000
DWV	1050 Vrms	-	-
Logic level	5 Vdc	10 mA	1 x 10^6

LED strip colours	Red	Green	Blue
Red	ON	OFF	OFF
Green	OFF	ON	OFF
Blue	OFF	OFF	ON
Yellow	ON	ON	OFF
Light Blue	OFF	ON	ON
Purple	ON	OFF	ON
White	ON	ON	ON

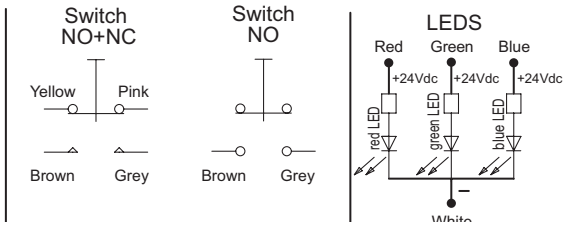

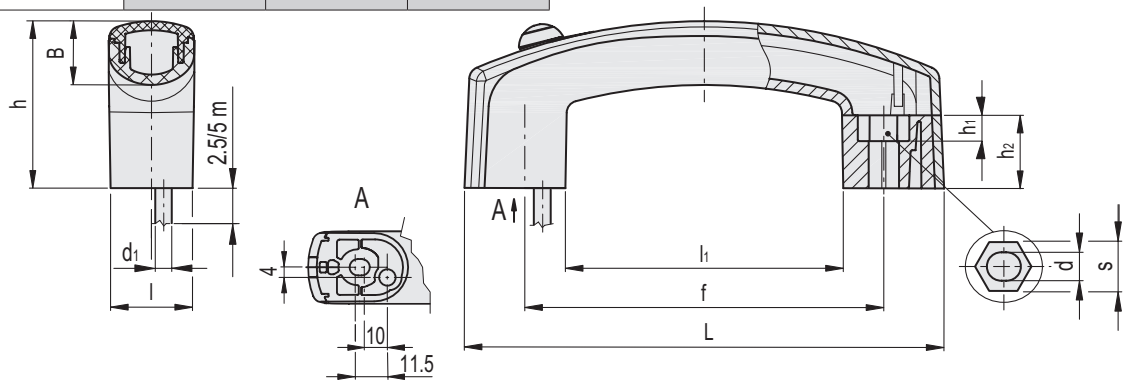

EMP-SWM-1NO+1NC-LD-F2,5

Code	Description	L	f	d	s	h	h_1	h_2	l	B	d_1	l_1	F1 [N]	F2 [N]	L1 [J]	L2 [J]	⚖
261045	EMP.160-SWM-1NO+1NC-LD-F2.5	160	117÷120	6.5	10	56.5	6.5	25	28	22	7.2	89.5	1000	2000	3	20	291

EMP-SWM-1NO+1NC-LD-F5

Code	Description	L	f	d	s	h	h_1	h_2	l	B	d_1	l_1	F1 [N]	F2 [N]	L1 [J]	L2 [J]	⚖
261046	EMP.160-SWM-1NO+1NC-LD-F5	160	117÷120	6.5	10	56.5	6.5	25	28	22	7.2	89.5	1000	2000	3	20	466

EMP-SWM-1NO-LD-F2,5

Code	Description	L	f	d	s	h	h_1	h_2	l	B	d_1	l_1	F1 [N]	F2 [N]	L1 [J]	L2 [J]	⚖
261041	EMP.160-SWM-1NO-LD-F2.5	160	117÷120	6.5	10	56.5	6.5	25	28	22	6.4	89.5	1000	2000	3	20	291

EMP-SWM-1NO-LD-F5

Code	Description	L	f	d	s	h	h_1	h_2	l	B	d_1	l_1	F1 [N]	F2 [N]	L1 [J]	L2 [J]	⚖
261042	EMP.160-SWM-1NO-LD-F5	160	117÷120	6.5	10	56.5	6.5	25	28	22	6.4	89.5	1000	2000	3	20	466

Models all rights reserved in accordance with the law. Always mention the source when reproducing our drawings and photos.