Breather caps

with double valve, technopolymer

METRIC NPT BSP SAE RoHS PA +100° -30°

MATERIAL
Polyamide based (PA) technopolymer.
- Cover: RAL 2004 orange, semi-matte finish, with graphic symbol "valve".
- Threaded connector: black colour, semi-matte finish.

PACKING RING
NBR synthetic rubber.

OVERPRESSURE VALVE
Technopolymer with NBR synthetic rubber O-ring and stainless steel spring.
Set at around 0.350 bar.

SUCTION VALVE
Technopolymer sealing disk in NBR synthetic rubber and stainless steel spring.
Set at around 0.030 bar.

AIR FILTER
Thermal-bonded polyester (TBP) filter with low pressure drop and high dust holding capacity.
Expected filtration class ISO 16890-1 ISO Rating coarse 75%, EN 779:2012 Class G4, air filtration 10 µ.

MAXIMUM CONTINUOUS WORKING TEMPERATURE
100°C.

FEATURES
The use of SFW. breather caps which create a pressure plenum chamber right above the oil level within tested limit conditions, in order to avoid any reservoir deformation, offers the following advantages:
- it reduces reservoir air volume intake keeping clean oil and filter
- it improves suction pump action during working conditions reducing cavitation phenomenon
- it prevents fluid leakage when the system is part of a mobile unit
- it reduces foam in fluid.

TECHNICAL DATA
Air flow rate for the different executions of breather caps can be obtained from the diagram on the basis of the difference of air pressure inside and outside the reservoir.

SPECIAL EXECUTIONS ON REQUEST
- Black colour cover.
- Overpressure valve set at 0.100 or 0.700 bar.
- Threaded connector also with NPT thread (National Taper Pipe Thread - ANSI-ASME B1-20, (SFW.70-3/4-NPT).



ELESA Original design

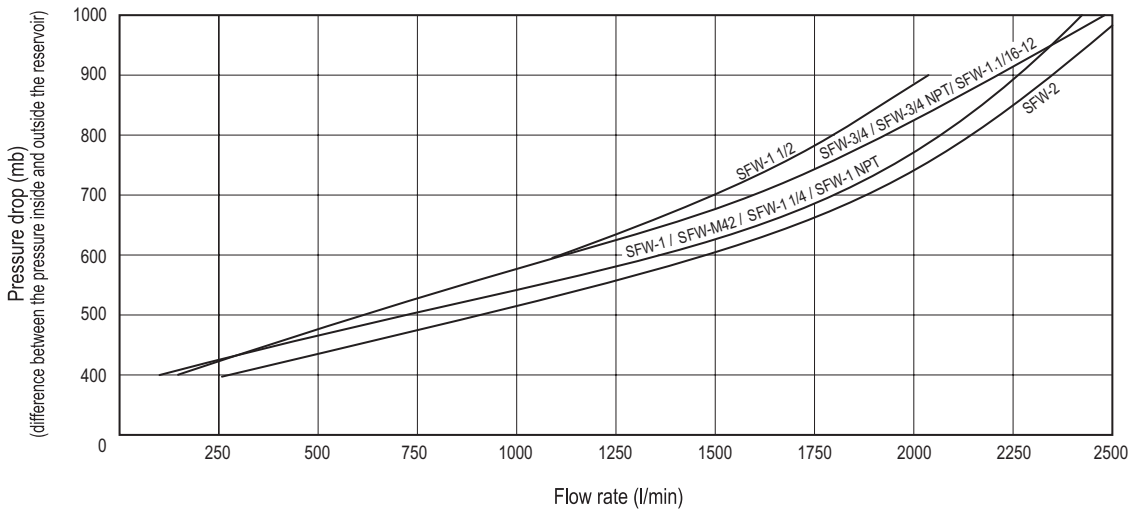

Models all rights reserved in accordance with the law. Always mention the source when reproducing our drawings and photos.

SFW pressurised breather cap functioning in a hydraulic circuit

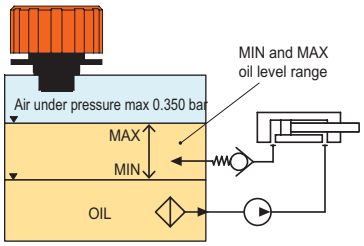

Normal working conditions

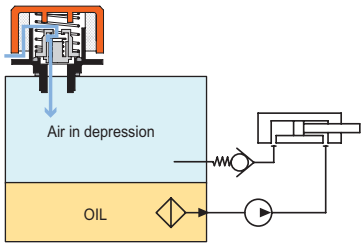

When in the reservoir a depression around 0.030 bar is produced, a flux of air entering the reservoir through the suction valve takes place.

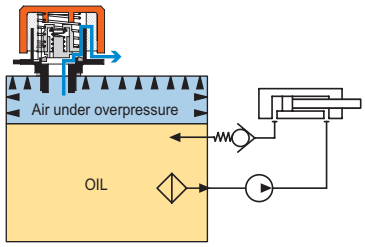

When in the reservoir an over pressure exceeding 0.350 (or 0.700) bar is produced, a flux of air is discharged through the safety valve.

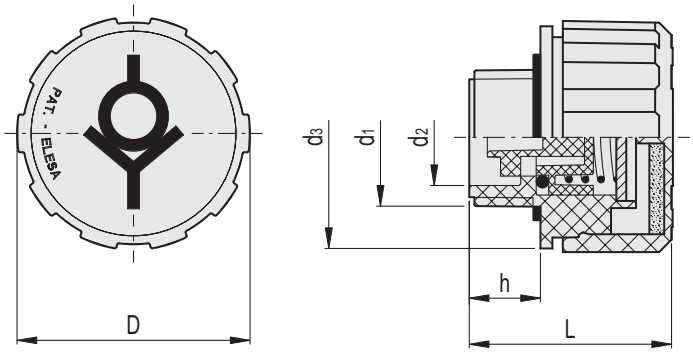

Code	Description	D	L	d1	d2	d3	h	⚖
54889	SFW.70-42x2-FPE-350mb	70	59.5	M42x2	34	68.5	17	94
54891	SFW.70-3/4+FPE-350mb	70	59.5	G 3/4	20.5	68.5	16	88
54893	SFW.70-1+FPE-350mb	70	59.5	G 1	26.5	68.5	17	88
54895	SFW.70-1.1/4+FPE-350mb	70	59.5	G 1.1/4	34	68.5	17	94
54897	SFW.70-1.1/2+FPE-350mb	70	59.5	G 1.1/2	41	68.5	17	92
54899	SFW.70-2+FPE-350mb	70	59.5	G 2	51	68.5	17	98
954891	SFW.70-3/4 NPT+FPE-350mb	70	59.5	3/4 NPT	20.5	68.5	17	90
954893	SFW.70-1 NPT+FPE-350mb	70	59.5	1 NPT	27.5	68.5	17	91
954901	SFW.70-1.1/16-12 SAE+FPE-350mb	70	59.5	1.1/16-12 UNF	20.5	68.5	17	90

Models all rights reserved in accordance with the law. Always mention the source when reproducing our drawings and photos.