RoHS PA +100° -30°

COVER
Polyamide based (PA) technopolymer, semi-matte finish.
- SFP+a.: RAL 2004 orange, marked “OIL”.
- SFP+a.....-C9: RAL 9005 black colour, marked “OIL”.
- SFP+a.....-C2-N: RAL 2004 orange, without “OIL” mark.
- SFP+a.....-C9-N: RAL 9005 black colour, without “OIL” mark.

THREADED FITTING
Polyamide based (PA) technopolymer, black colour, semi-matte finish.

PACKING RING
NBR synthetic rubber.

FLAT DIPSTICK
Flat section phosphatised steel.
On request and for sufficient quantities dipstick can be supplied in different lengths and/or complete with MAX-MIN level lines.

SPLASH GUARD
Technopolymer.

STANDARD EXECUTIONS
- **SFP+a**: without air filter (black splash guard).
- **SFP+F+a**: D = 31, 42 and 57 with “tech-fil” air filter in zinc-plated steel wire (orange splash guard); D = 70 with “tech-foam” air filter in polyurethane foam mesh (polyester base), air filtration 40 µ (grey splash guard).
- **SFP-BA+F+a**: with “tech-foam” air filter in polyurethane foam mesh (polyester base), air filtration 40 µ (grey splash guard).

Zinc-plated steel sheet bayonet.

MAXIMUM CONTINUOUS WORKING TEMPERATURE
100°C.

FEATURES AND APPLICATIONS
SFP+a breather caps come complete with splash guard device (ELESA originale design) that prevents oil loss and are particularly suitable for use where oil is violently agitated and could be splashed against the breather cap.

TECHNICAL DATA
Air flow rate for each model can be determined from the graph calculating the difference between the pressure inside and outside the reservoir.



ELESA Original design

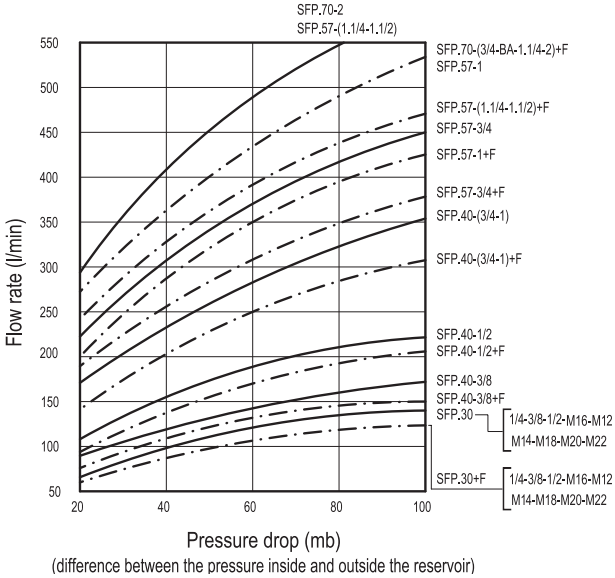

(difference between the pressure inside and outside the reservoir)

Operating layout



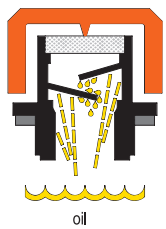

Models all rights reserved in accordance with the law. Always mention the source when reproducing our drawings and photos.

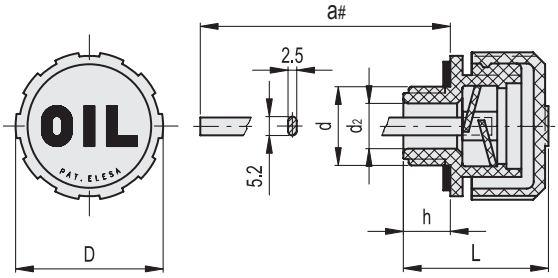

SFP+a

Code	Description	D	a#	L	d	d_2	h	⚖
54146	SFP.30-12x1.5+a	31	188	29.5	M12x1.5	6	9.5	36
54146-C9	SFP.30-12x1.5+a-C9	31	188	29.5	M12x1.5	6	9.5	36
54166	SFP.30-14x1.5+a	31	188	29.5	M14x1.5	8	9.5	36
54166-C9	SFP.30-14x1.5+a-C9	31	188	29.5	M14x1.5	8	9.5	36
53946	SFP.30-16x1.5+a	31	188	29.5	M16x1.5	10	9.5	36
53946-C9	SFP.30-16x1.5+a-C9	31	188	29.5	M16x1.5	10	9.5	36
53966	SFP.30-18x1.5+a	31	188	29.5	M18x1.5	10	9.5	38
53966-C9	SFP.30-18x1.5+a-C9	31	188	29.5	M18x1.5	10	9.5	38
53983	SFP.30-20x1.5+a	31	188	29.5	M20x1.5	12	9.5	38
53983-C9	SFP.30-20x1.5+a-C9	31	188	29.5	M20x1.5	12	9.5	38
53993	SFP.30-22x1.5+a	31	188	29.5	M22x1.5	12	9.5	33
53993-C9	SFP.30-22x1.5+a-C9	31	188	29.5	M22x1.5	12	9.5	33
54346	SFP.40-24x1.5+a	42	184	36.5	M24x1.5	18	11.5	45
54346-C9	SFP.40-24x1.5+a-C9	42	184	36.5	M24x1.5	18	11.5	45
54366	SFP.40-26x1.5+a	42	184	36.5	M26x1.5	18	11.5	35
54366-C9	SFP.40-26x1.5+a-C9	42	184	36.5	M26x1.5	18	11.5	35
53936	SFP.30-1/4+a	31	188	29.5	G 1/4	8	9.5	35
53936-C9	SFP.30-1/4+a-C9	31	188	29.5	G 1/4	8	9.5	35
54011	SFP.30-3/8+a	31	188	29.5	G 3/8	10	9.5	33
54011-C9	SFP.30-3/8+a-C9	31	188	29.5	G 3/8	10	9.5	37
54111	SFP.30-1/2+a	31	188	29.5	G 1/2	12	9.5	38
54111-C9	SFP.30-1/2+a-C9	31	188	29.5	G 1/2	12	9.5	38
54211	SFP.40-3/4+a	42	184	36.5	G 3/4	18	11.5	48
54211-C9	SFP.40-3/4+a-C9	42	184	36.5	G 3/4	18	11.5	48
54311	SFP.40-1+a	42	184	36.5	G 1	18	11.5	48
54311-C9	SFP.40-1+a-C9	42	184	36.5	G 1	18	11.5	48
56703	SFP.57-3/4+a	57	184	42	G 3/4	18	14	69
56703-C9	SFP.57-3/4+a-C9	57	184	42	G 3/4	18	14	67
56733	SFP.57-1+a	57	184	42	G 1	18	14	69
56733-C9	SFP.57-1+a-C9	57	184	42	G 1	18	14	67
54411	SFP.57-1¼+a	57	184	44	G 1 1/4	28	16	67
54411-C9	SFP.57-1¼+a-C9	57	184	44	G 1 1/4	28	16	67
54511	SFP.57-1½+a	57	184	44	G 1 1/2	28	16	69
54511-C9	SFP.57-1½+a-C9	57	184	44	G 1 1/2	28	16	69
54877	SFP.70-2+a	70	179	59	G 2	23	17	103
54877-C9	SFP.70-2+a-C9	70	179	59	G 2	23	17	103

You can choose lengths other than the standard option and/or add MAX-MIN level markings. To request customization, select an item and follow the wizard on the web.

Models all rights reserved in accordance with the law. Always mention the source when reproducing our drawings and photos.

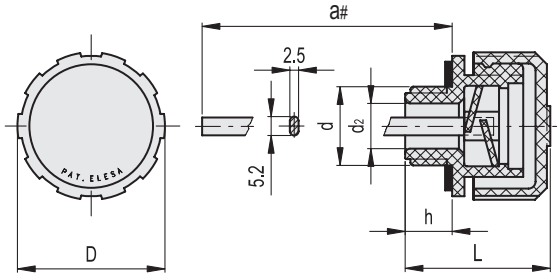

SFP+a-N

Code	Description	D	a#	L	d	d_2	h	⚖
54146-C2-N	SFP.30-12x1.5+a-C2-N	31	188	29.5	M12x1.5	6	9.5	36
54146-C9-N	SFP.30-12x1.5+a-C9-N	31	188	29.5	M12x1.5	6	9.5	36
54166-C2-N	SFP.30-14x1.5+a-C2-N	31	188	29.5	M14x1.5	8	9.5	36
54166-C9-N	SFP.30-14x1.5+a-C9-N	31	188	29.5	M14x1.5	8	9.5	36
53946-C2-N	SFP.30-16x1.5+a-C2-N	31	188	29.5	M16x1.5	10	9.5	36
53946-C9-N	SFP.30-16x1.5+a-C9-N	31	188	29.5	M16x1.5	10	9.5	36
53966-C2-N	SFP.30-18x1.5+a-C2-N	31	188	29.5	M18x1.5	10	9.5	38
53966-C9-N	SFP.30-18x1.5+a-C9-N	31	188	29.5	M18x1.5	10	9.5	38
53983-C2-N	SFP.30-20x1.5+a-C2-N	31	188	29.5	M20x1.5	12	9.5	38
53983-C9-N	SFP.30-20x1.5+a-C9-N	31	188	29.5	M20x1.5	12	9.5	38
53993-C2-N	SFP.30-22x1.5+a-C2-N	31	188	29.5	M22x1.5	12	9.5	33
53993-C9-N	SFP.30-22x1.5+a-C9-N	31	188	29.5	M22x1.5	12	9.5	33
54346-C2-N	SFP.40-24x1.5+a-C2-N	42	184	36.5	M24x1.5	18	11.5	45
54346-C9-N	SFP.40-24x1.5+a-C9-N	42	184	36.5	M24x1.5	18	11.5	45
54366-C2-N	SFP.40-26x1.5+a-C2-N	42	184	36.5	M26x1.5	18	11.5	35
54366-C9-N	SFP.40-26x1.5+a-C9-N	42	184	36.5	M26x1.5	18	11.5	35
53936-C2-N	SFP.30-1/4+a-C2-N	31	188	29.5	G 1/4	8	9.5	35
53936-C9-N	SFP.30-1/4+a-C9-N	31	188	29.5	G 1/4	8	9.5	35
54011-C2-N	SFP.30-3/8+a-C2-N	31	188	29.5	G 3/8	10	9.5	37
54011-C9-N	SFP.30-3/8+a-C9-N	31	188	29.5	G 3/8	10	9.5	37
54111-C2-N	SFP.30-1/2+a-C2-N	31	188	29.5	G 1/2	12	9.5	38
54111-C9-N	SFP.30-1/2+a-C9-N	31	188	29.5	G 1/2	12	9.5	38
54211-C2-N	SFP.40-3/4+a-C2-N	42	184	36.5	G 3/4	18	11.5	48
54211-C9-N	SFP.40-3/4+a-C9-N	42	184	36.5	G 3/4	18	11.5	48
54311-C2-N	SFP.40-1+a-C2-N	42	184	36.5	G 1	18	11.5	48
54311-C9-N	SFP.40-1+a-C9-N	42	184	36.5	G 1	18	11.5	48
56703-C2-N	SFP.57-3/4+a-C2-N	57	184	42	G 3/4	18	14	67
56703-C9-N	SFP.57-3/4+a-C9-N	57	184	42	G 3/4	18	14	67
56733-C2-N	SFP.57-1+a-C2-N	57	184	42	G 1	18	14	74
56733-C9-N	SFP.57-1+a-C9-N	57	184	42	G 1	18	14	74
54411-C2-N	SFP.57-1¼+a-C2-N	57	184	44	G 1 1/4	28	16	67
54411-C9-N	SFP.57-1¼+a-C9-N	57	184	44	G 1 1/4	28	16	67
54511-C2-N	SFP.57-1½+a-C2-N	57	184	44	G 1 1/2	28	16	69
54511-C9-N	SFP.57-1½+a-C9-N	57	184	44	G 1 1/2	28	16	69
54877-C2-N	SFP.70-2+a-C2-N	70	179	59	G 2	23	17	103
54877-C9-N	SFP.70-2+a-C9-N	70	179	59	G 2	23	17	103

You can choose lengths other than the standard option and/or add MAX-MIN level markings. To request customization, select an item and follow the wizard on the web.

Models all rights reserved in accordance with the law. Always mention the source when reproducing our drawings and photos.

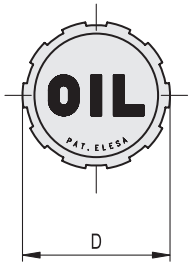

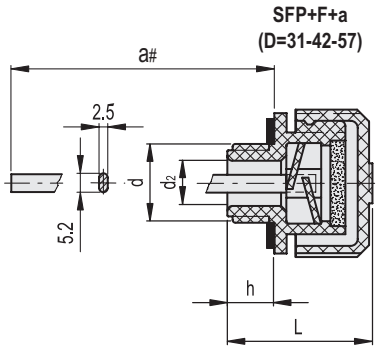

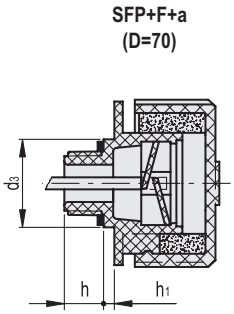

SFP+F+a

Code	Description	D	a#	L	d	d_2	d_3	h	h_1	⚖
54156	SFP.30-12x1.5+F FIL+a	31	188	29.5	M12x1.5	6	-	9.5	-	34
54156-C9	SFP.30-12x1.5+F FIL+a-C9	31	188	29.5	M12x1.5	6	-	9.5	-	34
54176	SFP.30-14x1.5+F FIL+a	31	188	29.5	M14x1.5	8	-	9.5	-	34
54176-C9	SFP.30-14x1.5+F FIL+a-C9	31	188	29.5	M14x1.5	8	-	9.5	-	34
53956	SFP.30-16x1.5+F+a	31	188	29.5	M16x1.5	10	-	9.5	-	34
53956-C9	SFP.30-16x1.5+F+a-C9	31	188	29.5	M16x1.5	10	-	9.5	-	34
53976	SFP.30-18x1.5+F+a	31	188	29.5	M18x1.5	10	-	9.5	-	39
53976-C9	SFP.30-18x1.5+F+a-C9	31	188	29.5	M18x1.5	10	-	9.5	-	39
53989	SFP.30-20x1.5+F+a	31	188	29.5	M20x1.5	12	-	9.5	-	38
53989-C9	SFP.30-20x1.5+F+a-C9	31	188	29.5	M20x1.5	12	-	9.5	-	38
53999	SFP.30-22x1.5+F+a	31	188	29.5	M22x1.5	12	-	9.5	-	40
53999-C9	SFP.30-22x1.5+F+a-C9	31	188	29.5	M22x1.5	12	-	9.5	-	40
54356	SFP.40-24x1.5+F+a	42	184	36.5	M24x1.5	18	-	11.5		49
54356-C9	SFP.40-24x1.5+F+a-C9	42	184	36.5	M24x1.5	18	-	11.5		49
54376	SFP.40-26x1.5+F+a	42	184	36.5	M26x1.5	18	-	11.5		40
54376-C9	SFP.40-26x1.5+F+a-C9	42	184	36.5	M26x1.5	18	-	11.5		40
53939	SFP.30-1/4+F+a	31	188	29.5	G 1/4	8	-	9.5	-	39
53939-C9	SFP.30-1/4+F+a-C9	31	188	29.5	G 1/4	8	-	9.5	-	38
54031	SFP.30-3/8+F+a	31	188	29.5	G 3/8	10	-	9.5	-	38
54031-C9	SFP.30-3/8+F+a-C9	31	188	29.5	G 3/8	10	-	9.5	-	38
54131	SFP.30-1/2+F+a	31	188	29.5	G 1/2	12	-	9.5	-	36
54131-C9	SFP.30-1/2+F+a-C9	31	188	29.5	G 1/2	12	-	9.5	-	39
54231	SFP.40-3/4+F+a	42	184	36.5	G 3/4	18	-	11.5	-	55
54231-C9	SFP.40-3/4+F+a-C9	42	184	36.5	G 3/4	18	-	11.5	-	55
54331	SFP.40-1+F+a	42	184	36.5	G 1	18	-	11.5	-	54
54331-C9	SFP.40-1+F+a-C9	42	184	36.5	G 1	18	-	11.5	-	54
56713	SFP.57-3/4+F+a	57	184	42	G 3/4	18	-	14	-	80
56713-C9	SFP.57-3/4+F+a-C9	57	184	42	G 3/4	18	-	14	-	74
56743	SFP.57-1+F+a	57	184	42	G 1	18	-	14	-	80
56743-C9	SFP.57-1+F+a-C9	57	184	42	G 1	18	-	14	-	74
54431	SFP.57-1¼+F+a	57	184	44	G 1 1/4	28	-	16	-	80
54431-C9	SFP.57-1¼+F+a-C9	57	184	44	G 1 1/4	28	-	16	-	74
54531	SFP.57-1½+F+a	57	184	44	G 1 1/2	28	-	16	-	79
54531-C9	SFP.57-1½+F+a-C9	57	184	44	G 1 1/2	28	-	16	-	79
54853	SFP.70-3/4+F+a	70	173	63	G 3/4	16	35	15	6	107
54853-C9	SFP.70-3/4+F+a-C9	70	173	63	G 3/4	16	35	15	6	107
54863	SFP.70-1¼+F+a	70	179	59	G 1 1/4	23	-	17	-	105
54863-C9	SFP.70-1¼+F+a-C9	70	179	59	G 1 1/4	23	-	17	-	105
54879	SFP.70-2+F+a	70	179	59	G 2	23	-	17	-	106
54879-C9	SFP.70-2+F+a-C9	70	179	59	G 2	23	-	17	-	106

You can choose lengths other than the standard option and/or add MAX-MIN level markings. To request customization, select an item and follow the wizard on the web.

Models all rights reserved in accordance with the law. Always mention the source when reproducing our drawings and photos.

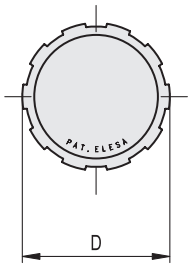

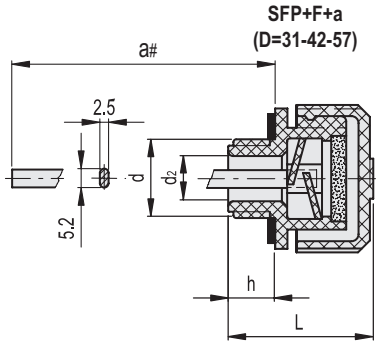

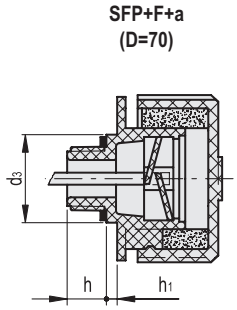

SFP+F+a-N

Code	Description	D	a#	L	d	d_2	d_3	h	h_1	⚖
54156-C2-N	SFP.30-12x1.5+F FIL+a-C2-N	31	188	29.5	M12x1.5	6	-	9.5	-	34
54156-C9-N	SFP.30-12x1.5+F FIL+a-C9-N	31	188	29.5	M12x1.5	6	-	9.5	-	34
54176-C2-N	SFP.30-14x1.5+F FIL+a-C2-N	31	188	29.5	M14x1.5	8	-	9.5	-	34
54176-C9-N	SFP.30-14x1.5+F FIL+a-C9-N	31	188	29.5	M14x1.5	8	-	9.5	-	34
53956-C2-N	SFP.30-16x1.5+F+a-C2-N	31	188	29.5	M16x1.5	10	-	9.5	-	34
53956-C9-N	SFP.30-16x1.5+F+a-C9-N	31	188	29.5	M16x1.5	10	-	9.5	-	34
53976-C2-N	SFP.30-18x1.5+F+a-C2-N	31	188	29.5	M18x1.5	10	-	9.5	-	39
53976-C9-N	SFP.30-18x1.5+F+a-C9-N	31	188	29.5	M18x1.5	10	-	9.5	-	39
53989-C2-N	SFP.30-20x1.5+F+a-C2-N	31	188	29.5	M20x1.5	12	-	9.5	-	38
53989-C9-N	SFP.30-20x1.5+F+a-C9-N	31	188	29.5	M20x1.5	12	-	9.5	-	38
53999-C2-N	SFP.30-22x1.5+F+a-C2-N	31	188	29.5	M22x1.5	12	-	9.5	-	40
53999-C9-N	SFP.30-22x1.5+F+a-C9-N	31	188	29.5	M22x1.5	12	-	9.5	-	40
54356-C2-N	SFP.40-24x1.5+F+a-C2-N	42	184	36.5	M24x1.5	18	-	11.5		49
54356-C9-N	SFP.40-24x1.5+F+a-C9-N	42	184	36.5	M24x1.5	18	-	11.5		49
54376-C2-N	SFP.40-26x1.5+F+a-C2-N	42	184	36.5	M26x1.5	18	-	11.5		40
54376-C9-N	SFP.40-26x1.5+F+a-C9-N	42	184	36.5	M26x1.5	18	-	11.5		40
53939-C2-N	SFP.30-1/4+F+a-C2-N	31	188	29.5	G 1/4	8	-	9.5	-	38
53939-C9-N	SFP.30-1/4+F+a-C9-N	31	188	29.5	G 1/4	8	-	9.5	-	38
54031-C2-N	SFP.30-3/8+F+a-C2-N	31	188	29.5	G 3/8	10	-	9.5	-	38
54031-C9-N	SFP.30-3/8+F+a-C9-N	31	188	29.5	G 3/8	10	-	9.5	-	38
54131-C2-N	SFP.30-1/2+F+a-C2-N	31	188	29.5	G 1/2	12	-	9.5	-	39
54131-C9-N	SFP.30-1/2+F+a-C9-N	31	188	29.5	G 1/2	12	-	9.5	-	39
54231-C2-N	SFP.40-3/4+F+a-C2-N	42	184	36.5	G 3/4	18	-	11.5	-	55
54231-C9-N	SFP.40-3/4+F+a-C9-N	42	184	36.5	G 3/4	18	-	11.5	-	55
54331-C2-N	SFP.40-1+F+a-C2-N	42	184	36.5	G 1	18	-	11.5	-	54
54331-C9-N	SFP.40-1+F+a-C9-N	42	184	36.5	G 1	18	-	11.5	-	54
56713-C2-N	SFP.57-3/4+F+a-C2-N	57	184	42	G 3/4	18	-	14	-	74
56713-C9-N	SFP.57-3/4+F+a-C9-N	57	184	42	G 3/4	18	-	14	-	74
56743-C2-N	SFP.57-1+F+a-C2-N	57	184	42	G 1	18	-	14	-	74
56743-C9-N	SFP.57-1+F+a-C9-N	57	184	42	G 1	18	-	14	-	74
54431-C2-N	SFP.57-1¼+F+a-C2-N	57	184	44	G 1 1/4	28	-	16	-	74
54431-C9-N	SFP.57-1¼+F+a-C9-N	57	184	44	G 1 1/4	28	-	16	-	74
54531-C2-N	SFP.57-1½+F+a-C2-N	57	184	44	G 1 1/2	28	-	16	-	79
54531-C9-N	SFP.57-1½+F+a-C9-N	57	184	44	G 1 1/2	28	-	16	-	79
54853-C2-N	SFP.70-3/4+F+a-C2-N	70	173	63	G 3/4	16	35	15	6	107
54853-C9-N	SFP.70-3/4+F+a-C9-N	70	173	63	G 3/4	16	35	15	6	107
54863-C2-N	SFP.70-1¼+F+a-C2-N	70	179	59	G 1 1/4	23	-	17	-	105
54863-C9-N	SFP.70-1¼+F+a-C9-N	70	179	59	G 1 1/4	23	-	17	-	105
54879-C2-N	SFP.70-2+F+a-C2-N	70	179	59	G 2	23	-	17	-	106
54879-C9-N	SFP.70-2+F+a-C9-N	70	179	59	G 2	23	-	17	-	106

You can choose lengths other than the standard option and/or add MAX-MIN level markings. To request customization, select an item and follow the wizard on the web.

Models all rights reserved in accordance with the law. Always mention the source when reproducing our drawings and photos.



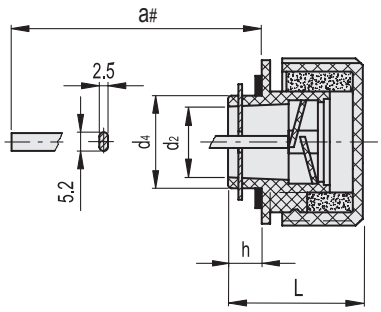

SFP-BA+F+a

Code	Description	D	a#	L	d_2	d_4	h	⚖
54883	SFP.70-BA+F+a	70	179	56	30	39	14	113
54883-C9	SFP.70-BA+F+a-C9	70	179	56	30	39	14	100

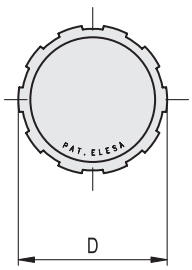

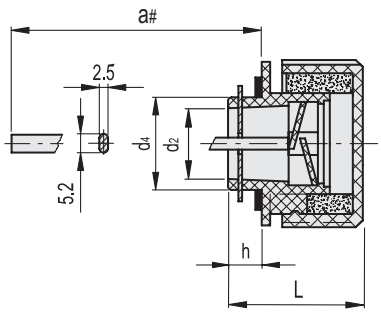

SFP-BA+F+a-N

Code	Description	D	a#	L	d_2	d_4	h	⚖
54883-C2-N	SFP.70-BA+F+a-C2-N	70	179	56	30	39	14	100
54883-C9-N	SFP.70-BA+F+a-C9-N	70	179	56	30	39	14	100

Models all rights reserved in accordance with the law. Always mention the source when reproducing our drawings and photos.