MPG | Guide rail clamps

Technopolymer

INOX STAINLESS STEEL · RoHS · PA · +100° -30°

MATERIAL

Glass-fibre reinforced polyamide based (PA) technopolymer, black colour, matte finish.

STANDARD EXECUTIONS

AISI 304 stainless steel cylindrical head screws with hexagon socket, nickel-plated brass nuts.

- **MPG-T**: for both the standard trapezoidal guides.
- **MPG-C**: for round guide.
- **MPG-R**: for rectangular guide.

FEATURES AND APPLICATIONS

MPG-T execution can be used with the side guides having an AISI 304 stainless steel bracket of thickness 1.5 or 2 mm.

ASSEMBLY INSTRUCTIONS

- Mount the guide rail clamp on the support bar (dimension 25x8 mm), the assembly consists in inserting the bar into the specific clamp slot (Fig.1).
- Insert the guide into the clamp housing and then clamp the screws (Fig.2).
- Set the height of the clamp and clamp by means of a M8 screw, not supplied (Fig.3).



Fig.1 Fig.2 Fig.3

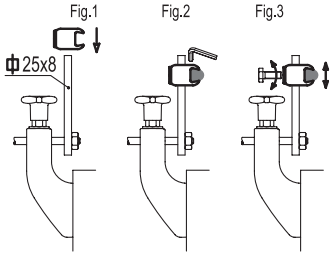

MPG-T

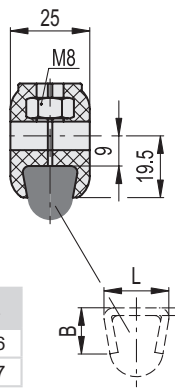

MPG-C

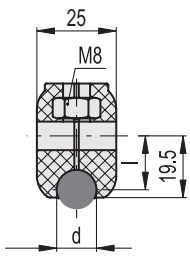

MPG-R

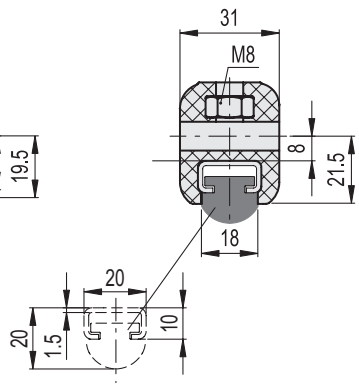

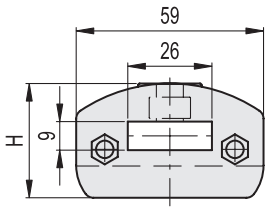

s	B	L
1.5	17.5	16
2	18	17

INOX STAINLESS STEEL

Code	Description	d	H	l	⚖
419688	MPG-T	-	36	-	46
419749	MPG-C-8	8	36	16	44
419788	MPG-C-10	10	36	15	45
419687	MPG-C-12	12	36	15	46
419787	MPG-C-14	14	36	15	47
419698	MPG-R	-	38	-	50

Models all rights reserved in accordance with the law. Always mention the source when reproducing our drawings and photos.