MM-FL-RG1-NK | Lower brackets for clamping screw

Steel

RoHS

MATERIAL
Nickel-plated steel bracket.
Screws and centering bushings MM-CC (see page -) in black-oxide steel.

FEATURES
The brackets are compatible with the pneumatic fastening clamps MM-BL-NK (see page -).

SPECIAL EXECUTIONS ON REQUEST
Y-shaped brackets are compatible with pneumatic fastening clamps MM-BL-NK (see page -), MM-BI-NK (see page -) or MM-BC-NK (see page -).

ACCESSORIES ON REQUEST
Clamping screws with ball terminal MM-RG (see page -).



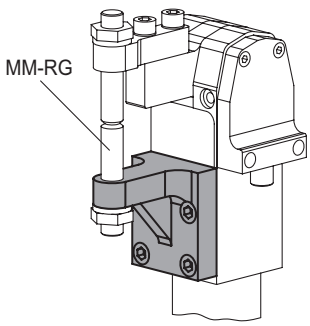

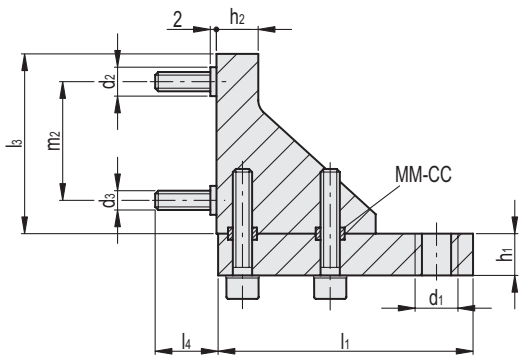

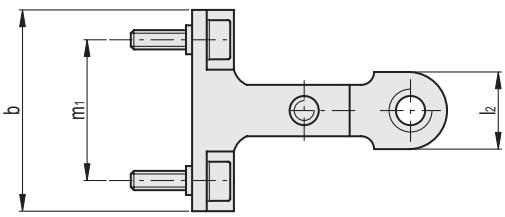

Code	Description	b	d1	d2 H8 / h6	d3	h1	h2	l1	l2	l3	l4	m1	m2	⚖
MM.44020-NK	MM-FL-RG1-20-NK	32	M8	7	M5	10	10	38	13	37	7.5	22	17	121
MM.44032-NK	MM-FL-RG1-32-NK	42	M10	9	M6	12	12	54.5	17	48.5	10	30	25	261
MM.44044-NK	MM-FL-RG1-40-NK	52	M12	11	M8	14	14	63	20	61	13.5	37	30	471
MM.44050-NK	MM-FL-RG1-50-NK	62	M12	13	M10	16	16	73.5	20	83.5	13.5	44	47	779

Models all rights reserved in accordance with the law. Always mention the source when reproducing our drawings and photos.