Inclined handles

Technopolymer

RoHS PP +100° -20°

MATERIAL

High-resilience polypropylene based (PP) technopolymer handle, RAL 9005 black colour or RAL 7035 (C3) grey colour, matte finish.

STANDARD EXECUTION

Brass bosses, threaded blind holes.

FEATURES AND APPLICATIONS

The inclined shape of the handle guarantees an ergonomic grip.
Suitable for sliding door applications.

TECHNICAL DATA

Tensile stress and impact strength: the values F1, F2, F3, L1, L2 and L3 indicated in the table were obtained during breaking tests carried out with the appropriate dynamometric equipment under the test conditions shown in the figure with ambient temperature.



ELESA Original design

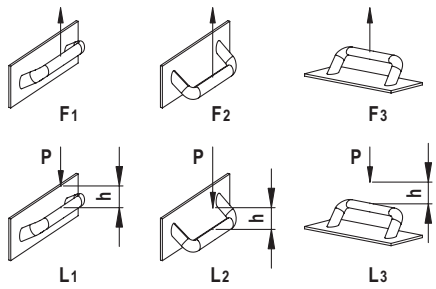

L [J] = P [N] • h [m]

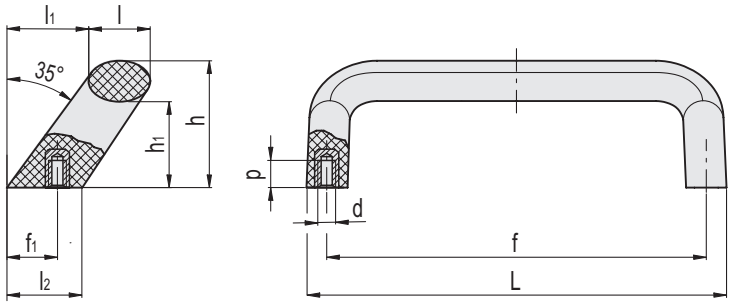

M.743

Code	Description	L	f	d6H	f1	h	h1	l	l1	l2	p	F1 [N]	F2 [N]	F3 [N]	L1 [J]	L2 [J]	L3 [J]	⚖
37431	M.743/190 B-M6	176	160±1	M6	21.5	53.5	36.5	26	34	31.5	10	2300	2100	1500	19	16	13	115
37432	M.743/190 B-M8	176	160±1	M8	21.5	53.5	36.5	26	34	31.5	13	2300	2100	1500	19	16	13	115
37431-C3	M.743/190 B-M6-C3	176	160±1	M6	21.5	53.5	36.5	26	34	31.5	10	2300	2100	1500	19	16	13	115
37432-C3	M.743/190 B-M8-C3	176	160±1	M8	21.5	53.5	36.5	26	34	31.5	13	2300	2100	1500	19	16	13	115

12/2024

Models all rights reserved in accordance with the law. Always mention the source when reproducing our drawings and photos.