Linear guide rail

Round profile R20, technopolymer, stainless steel

INOX STAINLESS STEEL | RoHS | HMWPE | +90° -20°

GUIDE PROFILE

Polyethylene based (HMWPE) technopolymer, natural colour.

BRACKET

AISI 304 stainless steel.

FEATURES AND APPLICATIONS

GLR guide rail is used to guide very unstable products on conveyor belts, such as bottles (Fig.1) or cans (Fig.2), avoiding rotation, without leaving traces on the containers.
High molecular weight polyethylene (HMWPE) has a high wear resistance; it is particularly suitable for high-speed movements due to its low coefficient of friction.
It can be used with GLP-12 guide rail.
Supplied in bars of 1500 or 3000 mm length.

ACCESSORIES ON REQUEST

- Guide rail clamps MPG-T-S, MPG-2T, MPG-T.
- End brackets for linear guide rails TGLT.



Fig.1

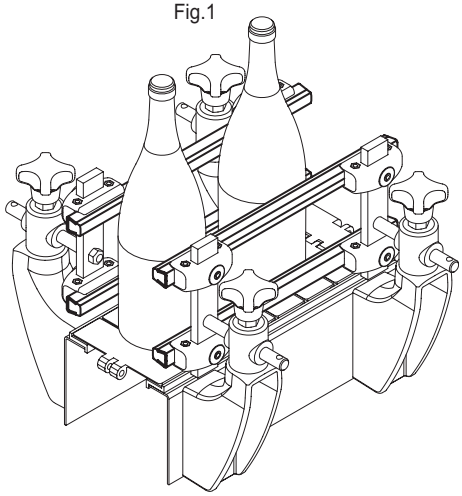

Fig.2

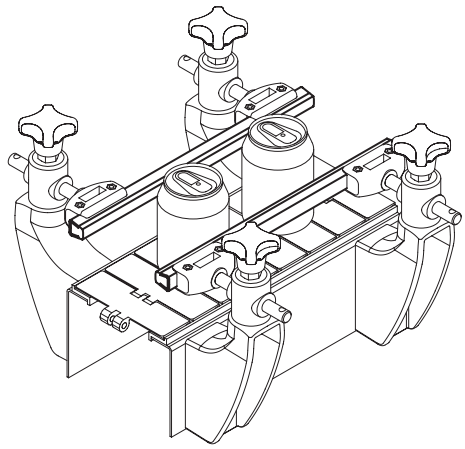

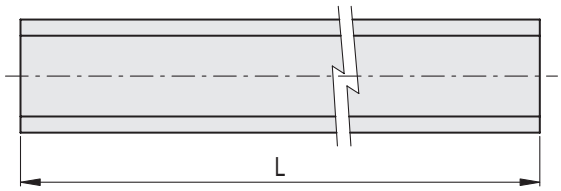

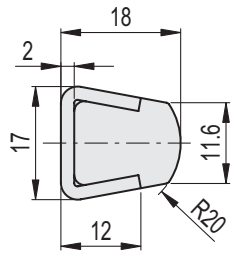

INOX STAINLESS STEEL

Code	Description	L	⚖
419217	GLR-12-3000	3000	2070
419216	GLR-12-1500	1500	1038

11/2025

Models all rights reserved in accordance with the law. Always mention the source when reproducing our drawings and photos.