Linear guide rail, high temperature

Flat profile, technopolymer, stainless steel

INOX STAINLESS STEEL · HT · RoHS · PTFE · +260° -200°

GUIDE PROFILE
Polytetrafluoroethylene based (PTFE) technopolymer, natural colour.

BRACKET
AISI 304 stainless steel.

FEATURES AND APPLICATIONS
GLP-HP guide rail is used for the side guide of products with different dimensions on conveyor belts (Fig.1), in environments with high temperature, such as ovens, fryers, steam chambers. It can also be used as a support for metal meshes inside ovens (Fig. 2)
Supplied in bars of 1500 or 3000 mm length.

ACCESSORIES ON REQUEST
- Guide rail clamps MPG-T-S, MPG-2T, MPG-T.
- End brackets for linear guide rails TGLT.



Fig.1

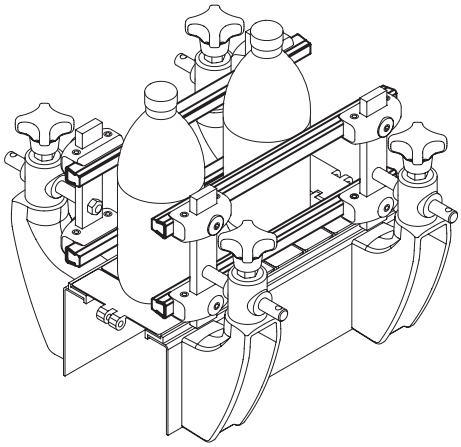

Fig.2

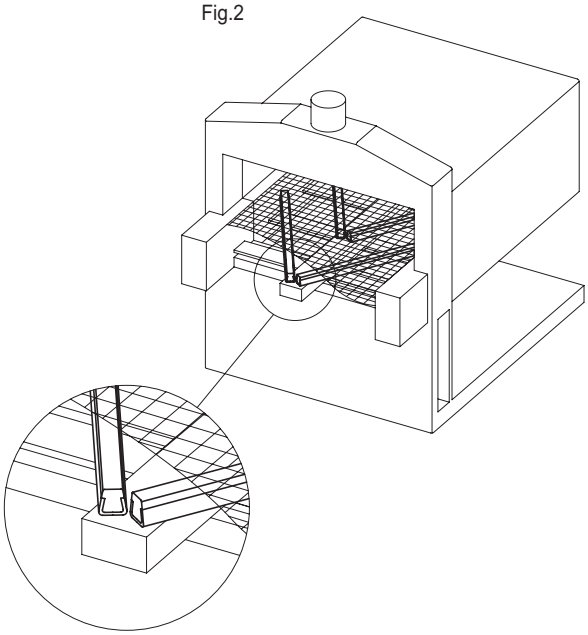

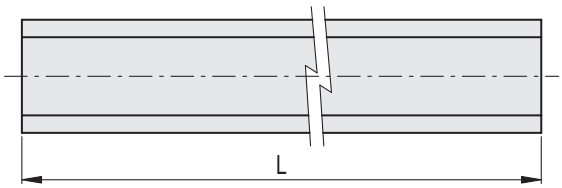

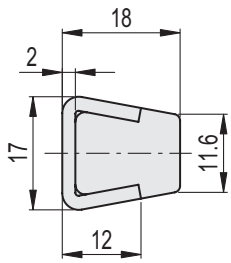

INOX STAINLESS STEEL

Code	Description	L	⚖
419206	GLP-HT-12-1500	1500	1470
419207	GLP-HT-12-3000	3000	2880

elesa 11/2025

Models all rights reserved in accordance with the law. Always mention the source when reproducing our drawings and photos.