RoHS PP +90° 0°

MATERIAL
- Flange: zinc-plated steel with bayonet connector.
- Basket: polypropylene based (PP) technopolymer, black colour.

PACKING RINGS
NBR synthetic rubber flat washer.

MOUNTING
By means of six zinc-plated steel self-tapping screws TC-N10 (Ø 4.8x19) UNI 6951-DIN 7971, supplied.

NOTE
The breather cap to be coupled to the flange is not included in the supply and has to be ordered sepatately.
Depending on the customer's requirements, can be used bretaher caps type SFN. (see page 1534), SFP. (see page 1538), SFW. (see page 1548).

SPECIAL EXECUTIONS ON REQUEST
Flange with bayonet connector without basket (FRB).



ELESA Original design

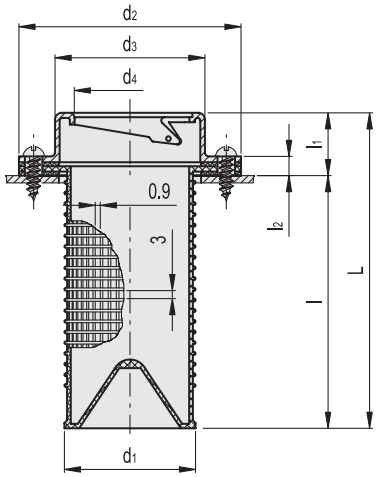

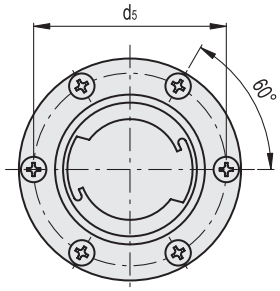



Drilling template

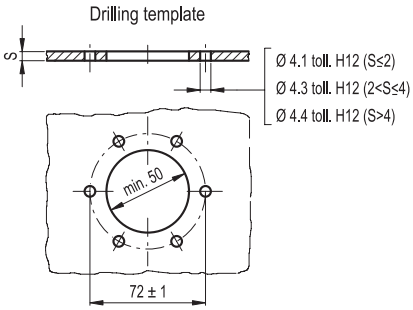

Code	Description	L	d1	d2	d3	d4	d5	l	l1	l2	⚖
9201	FRB+C	114.5	49	83	58	39	72	94.5	20	7	125

1/2026

Models all rights reserved in accordance with the law. Always mention the source when reproducing our drawings and photos.