FHB | Magnetic stand

for flexible coolant hoses, technopolymer

RoHS PA +80° -20°

BODY
Polyamide based (PA) technopolymer, black colour.

MAGNETIC BASE
Ferrite retaining magnet

CAP AND FITTING
Polypropylene based (PP) technopolymer, black colour.

FEATURES
The stand allows you to use up to two 1/4" segments simultaneously; the magnet integrated in the structure allows the system to be anchored in multiple positions, also facilitating repeated movements.
Fluid can enter the system via the barbed fitting to be coupled with an external tube, for a better seal, the use of tightening bands is recommended.
The magnetic stand can also be used with 1/2" systems by means of a threaded adapter which can be purchased.
See Flexible coolant hoses (on page -).

CHEMICAL COMPATIBILITY
Material resistant to detergents, lubricants and oils, avoid contact with strong acids and bases.
To use fluids other than those listed, contact Elesa's technical department.
In any case we suggest to verify the suitability of the product under the actual working conditions.



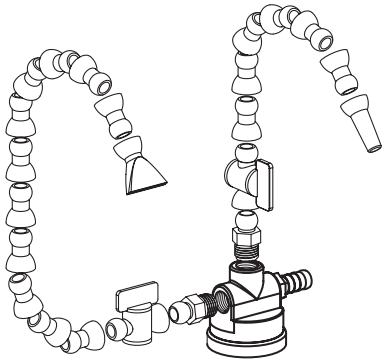

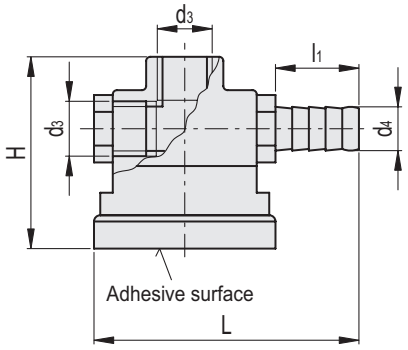

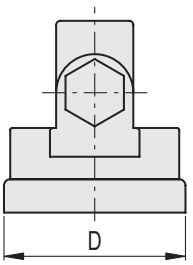

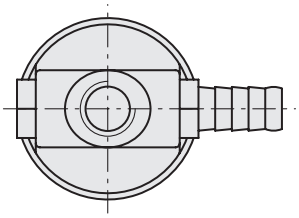

Code	Description	D	L	H	d3	d4	l1	For coolant hoses	⚖
471251	FHB.1/4	42	63.5	40	G 1/4	10.5	20	1/4	126

Models all rights reserved in accordance with the law. Always mention the source when reproducing our drawings and photos.