LV.F-125-APS | Levelling elements for ground mounting

Technopolymer base, steel stem

RoHS PA NBR +100° -30°

BASE
Glass-fibre reinforced polyamide based (PA) technopolymer, black colour, matte finish.

THROUGH STEM
Threaded zinc-plated steel with regulation hexagon.

STANDARD EXECUTIONS
- **LV.F-APS**: without no-slip disk.
- **LV.F-APS-AS**: with NBR rubber no-slip disk, hardness 90 Shore A, supplied assembled, reinforced with zinc-plated steel plate, fixed by means of two screws.

GROUND MOUNTING
By means of two holes at 180°, supplied covered by a diaphragm (which can be easily removed by a metal tool), to avoid all unhealthy deposits of dirt and dust when the ground mounting is not required (see Fig. 1).

FEATURES
The special knurling under the lower lip of the base provides excellent stability and grip when using the levelling element without no-slip disk even on surfaces that are not perfectly flat.
The components of the levelling elements (base and stem) are supplied already assembled.

ACCESSORIES ON REQUEST
Zinc-plated steel nut (see Nuts NT. on page 1137).

SPECIAL EXECUTIONS ON REQUEST
AISI 304 stainless steel stems.

ELESA Original design

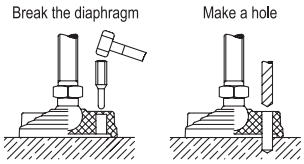

Fig.1

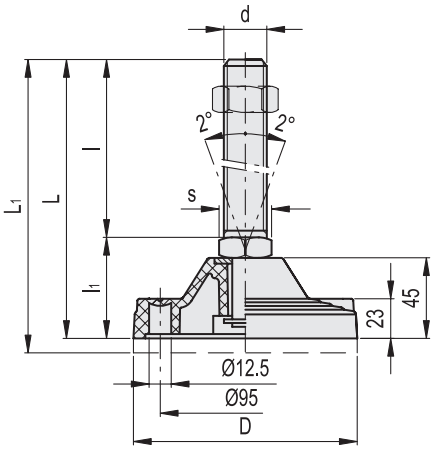

LV.F-APS **LV.F-APS-AS**

Code	Description	Code	Description	D	d	L	L1#	l	l1	s	Max. limit stati load* [N]	⚖	⚖#
313961	LV.F-125-APS-M20x95	316961	LV.F-125-APS-AS-M20x95	125	M20	150	160	95	55	24	40000	470	720
313965	LV.F-125-APS-M20x155	316965	LV.F-125-APS-AS-M20x155	125	M20	210	220	155	55	24	40000	590	840
313971	LV.F-125-APS-M24x95	316971	LV.F-125-APS-AS-M24x95	125	M24	150	160	95	55	24	40000	625	875
313975	LV.F-125-APS-M24x155	316975	LV.F-125-APS-AS-M24x155	125	M24	210	220	155	55	24	40000	740	990
313985	LV.F-125-APS-M30x155	316985	LV.F-125-APS-AS-M30x155	125	M30	210	220	155	55	30	40000	930	1180

* The max static load is the value above which the load applied to the element may cause some plastic material breakage, in particular conditions of use. Obviously, a factor that takes into consideration the importance and the safety level of the specific application must be applied to this value.
# Data with no-slip disk mounted.

Models all rights reserved in accordance with the law. Always mention the source when reproducing our drawings and photos.

elesa